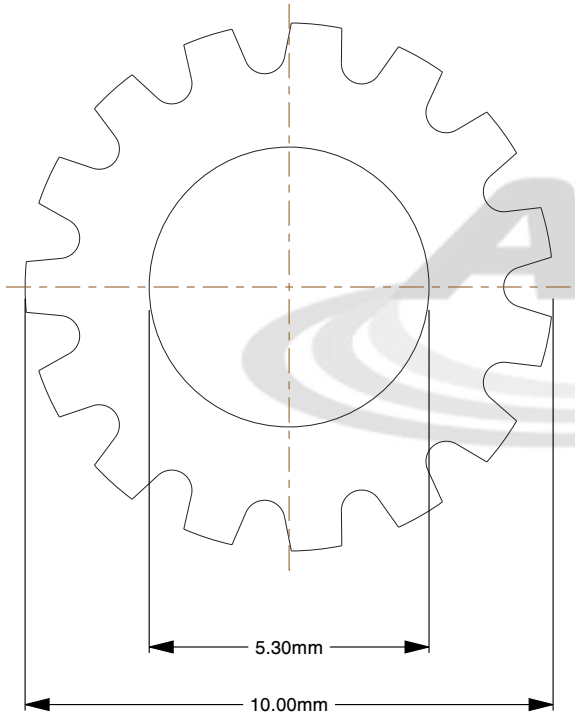

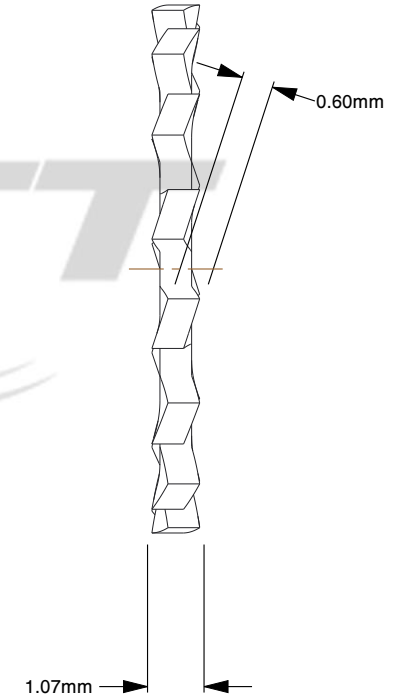

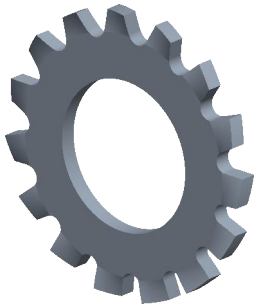

Notes:

1. **Fits Bolt Size:** M5
2. **Finish:** Zinc Cr + 3
3. **Material:** Steel
4. **Measurement Type:**Metric
5. **Package Quantity:** 80000
6. **Package Size:** Bulk
7. **Specification:** DIN 6797-A
8. **Product Type:** External Tooth Lockwashers

www.aftfasteners.com

THIRD ANGLE PROJECTION

This file and the related information are provided for reference only and may change without notice. AFT Fasteners does not guarantee the accuracy, completeness, or suitability of this file or the information provided. You are responsible for how you use this file and its information.

This document is the property of AFT Fasteners. The information in it may not be copied, shared, or given to any third party without written permission from AFT Fasteners.

TITLE	DESCRIPTION
External Tooth Lockwashers	M5 DIN 6797A External Tooth Lockwasher Zinc Cr + 3

Sheet Size	PART NUMBER	Rev.	ISSUED
A	BB-741076-B	01	2026-10-20

SCALE: 6.985	Unless otherwise specified Dimensions are in MILLIMETERS