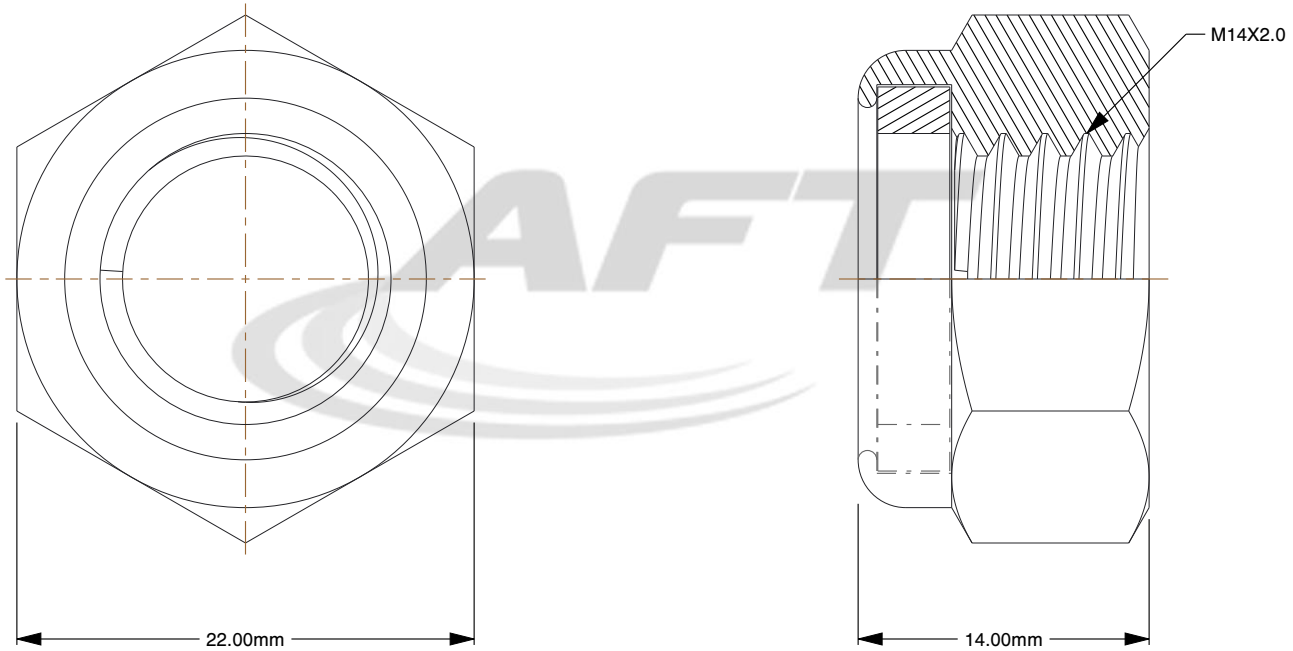

Notes:

1. **Diameter:** M14
2. **Diameter-Thread Size:** M14-2.00
3. **Finish:** Plain
4. **Grade:** 304 / 18-8 / A2
5. **Material:** Stainless Steel
6. **Measurement Type:** Metric
7. **Package Quantity:** 500
8. **Package Size:** Bulk
9. **Product Type:** Nylon Insert Lock Nuts
10. **Specifications:** DIN 985
11. **Thread:** Coarse

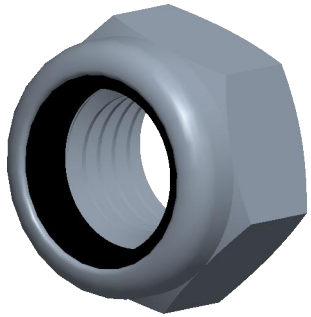

www.aftfasteners.com

THIRD ANGLE PROJECTION

This file and the related information are provided for reference only and may change without notice. AFT Fasteners does not guarantee the accuracy, completeness, or suitability of this file or the information provided. You are responsible for how you use this file and its information.

This document is the property of AFT Fasteners. The information in it may not be copied, shared, or given to any third party without written permission from AFT Fasteners.

TITLE	DESCRIPTION
Nylon Insert Lock Nuts	M14-2.00 DIN 985 Nylon Insert Locknuts, A4 Stainless Steel

Sheet Size	PART NUMBER	Rev.	ISSUED
A	BN-B-W985A4M14-B	01	2026-10-27

SCALE: 2.750	Unless otherwise specified Dimensions are in MILLIMETERS