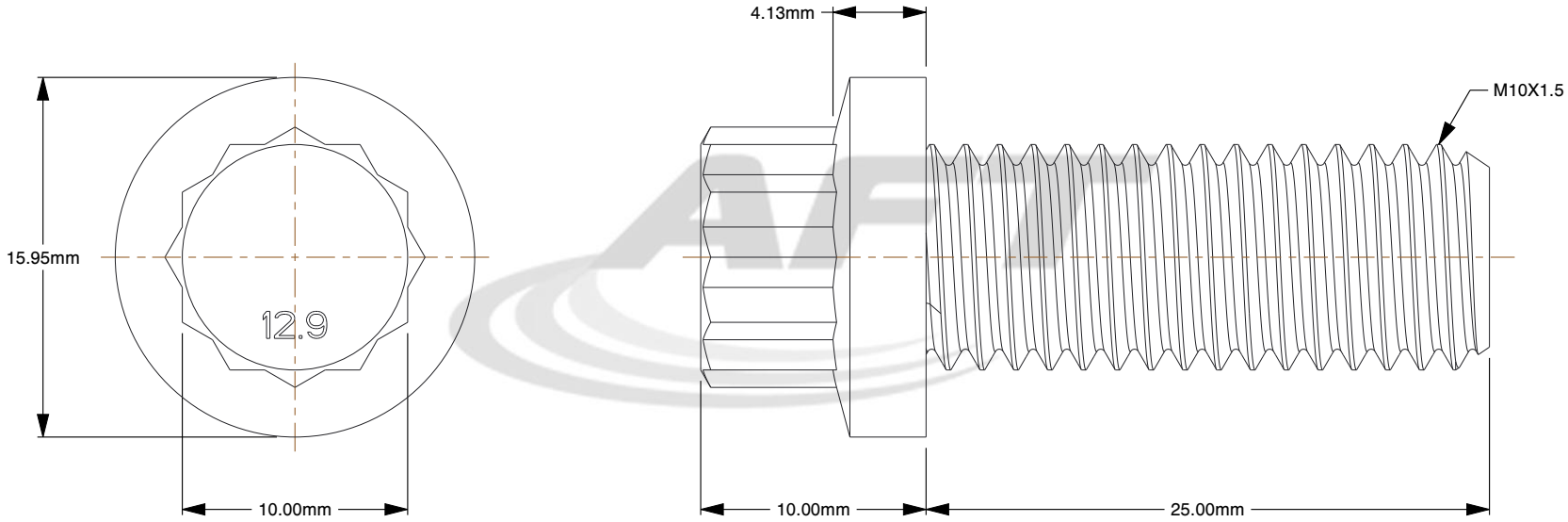

Notes:

1. **Diameter-Thread Size:** M10-1.50
2. **Length:** 25 mm
3. **Measurement Type:** Metric
4. **Product Type:** 12 Point Bolts
5. **Grade:** Class 12.9
6. **Material:** Steel
7. **Finish:** Plain & Oil
8. **Package Quantity:** 100
9. **Package Size:** Package
10. **Thread:** Coarse
11. **Thread Style:** Fully Threaded
12. **Diameter:** M10
13. **Head Style:** 12 Point Flange

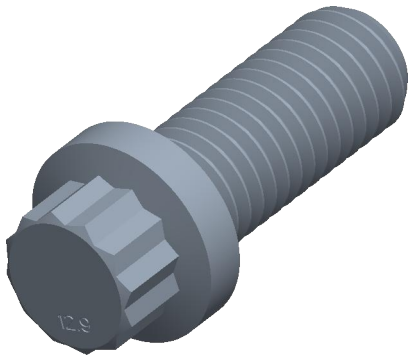

AFT www.aftfasteners.com			THIRD ANGLE PROJECTION	
This file and the related information are provided for reference only and may change without notice. AFT Fasteners does not guarantee the accuracy, completeness, or suitability of this file or the information provided. You are responsible for how you use this file and its information.			This document is the property of AFT Fasteners. The information in it may not be copied, shared, or given to any third party without written permission from AFT Fasteners.	
TITLE 12 Point Bolts			PART NUMBER NF-BD12FL10025150P-P	
PART NUMBER NF-BD12FL10025150P-P		DESCRIPTION M10-1.5 x 25mm 12 Point Flange Bolt, Class 12.9, Plain, Fully Threaded		
Sheet Size	Design Code	Drawing No.	Rev.	ISSUED
A	001	10001	01	2026-10-20
SCALE: 3.166		Unless otherwise specified Dimensions are in INCHES		