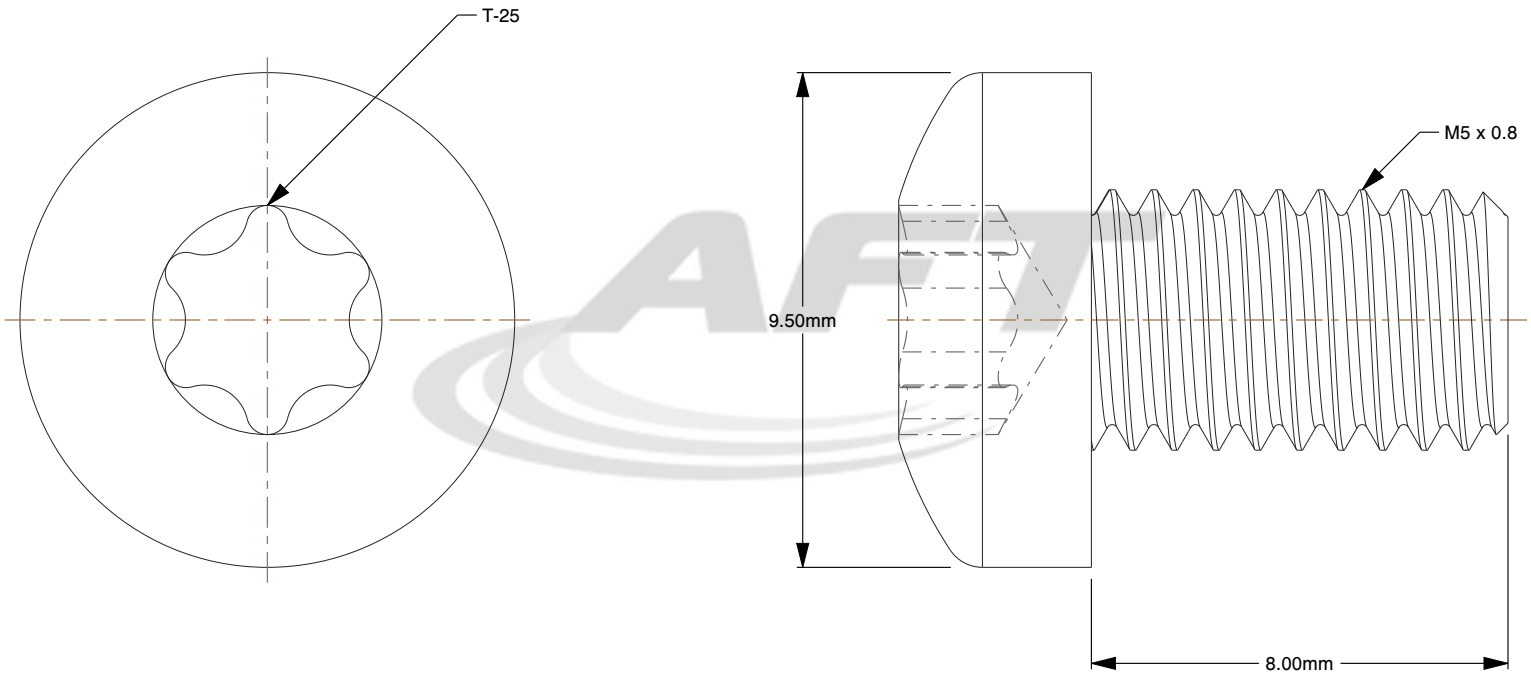

Notes:

1. **Diameter:** M5
2. **Diameter-Thread Size:** M5-0.80
3. **Drive Style:** Six Lobe / Torx
4. **Finish:** Zinc Cr + 3
5. **Head Style:** Pan
6. **Length:** 8 mm
7. **Material:** Steel
8. **Measurement Type:** Metric
9. **Package Quantity:** 500
10. **Package Size:** Package
11. **Product Type:** Machine Screws
12. **Specifications:** ISO 14583
13. **Thread:** Coarse
14. **Grade:** Class 4.8
15. **Drive Size:** T-25
16. **Thread Style:** Fully Threaded

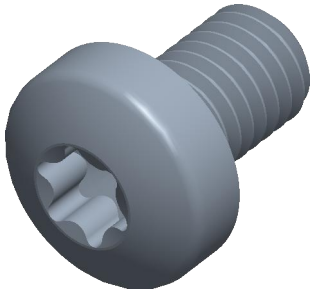

www.aftfasteners.com

THIRD ANGLE PROJECTION

This file and the related information are provided for reference only and may change without notice. AFT Fasteners does not guarantee the accuracy, completeness, or suitability of this file or the information provided. You are responsible for how you use this file and its information.

This document is the property of AFT Fasteners. The information in it may not be copied, shared, or given to any third party without written permission from AFT Fasteners.

TITLE	DESCRIPTION
Pan Head Screws	M5-0.80x8 MM Fully Threaded, T25 Drive, Metric Class 4.8, 6 Lobe, Pan Head Machine Screw ISO 14583, Zinc CR + 3

Sheet Size	PART NUMBER	Rev.	ISSUED
A	BB-V32098-P	01	2026-10-20

SCALE: 6.889	Unless otherwise specified Dimensions are in MILLIMETERS