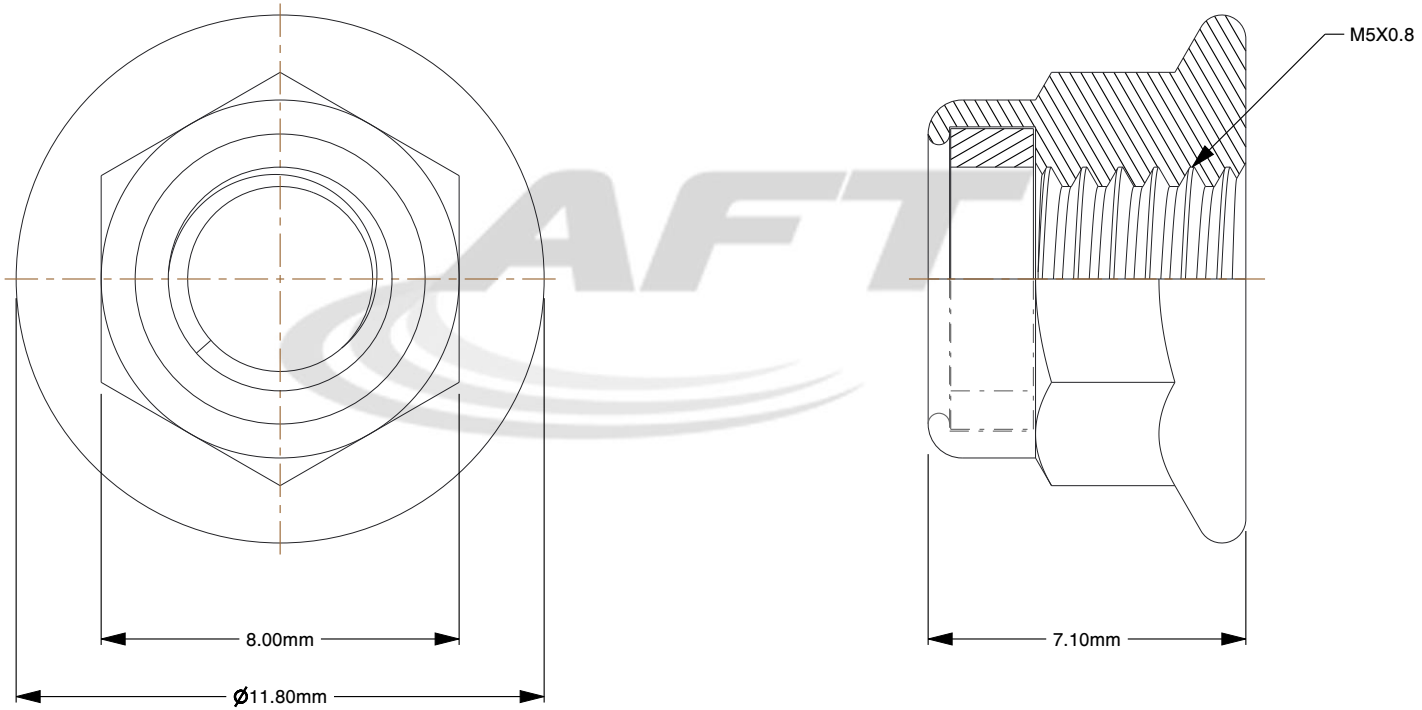

Notes:

1. **Diameter:** M5
2. **Diameter-Thread Size:** M5-0.80
3. **Finish:** Plain
4. **Grade:** 304 / 18-8 / A2
5. **Material:** Stainless Steel
6. **Measurement Type:** Metric
7. **Package Quantity:** 250
8. **Package Size:** Package
9. **Product Type:** Nylon Flange Lock Nuts
10. **Specifications:** DIN 6926
11. **Thread:** Coarse

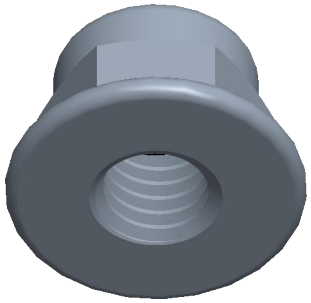

www.aftfasteners.com

THIRD ANGLE PROJECTION

This file and the related information are provided for reference only and may change without notice. AFT Fasteners does not guarantee the accuracy, completeness, or suitability of this file or the information provided. You are responsible for how you use this file and its information.

This document is the property of AFT Fasteners. The information in it may not be copied, shared, or given to any third party without written permission from AFT Fasteners.

TITLE	DESCRIPTION
Nylon Flange Nut	M5-0.80 DIN 6926 Flange Nylon Insert Locknuts, 18-8 Stainless Steel

Sheet Size	PART NUMBER	Rev.	ISSUED
A	SS-31-MFN-5	01	2026-10-20

SCALE: 5.919	Unless otherwise specified Dimensions are in MILLIMETERS