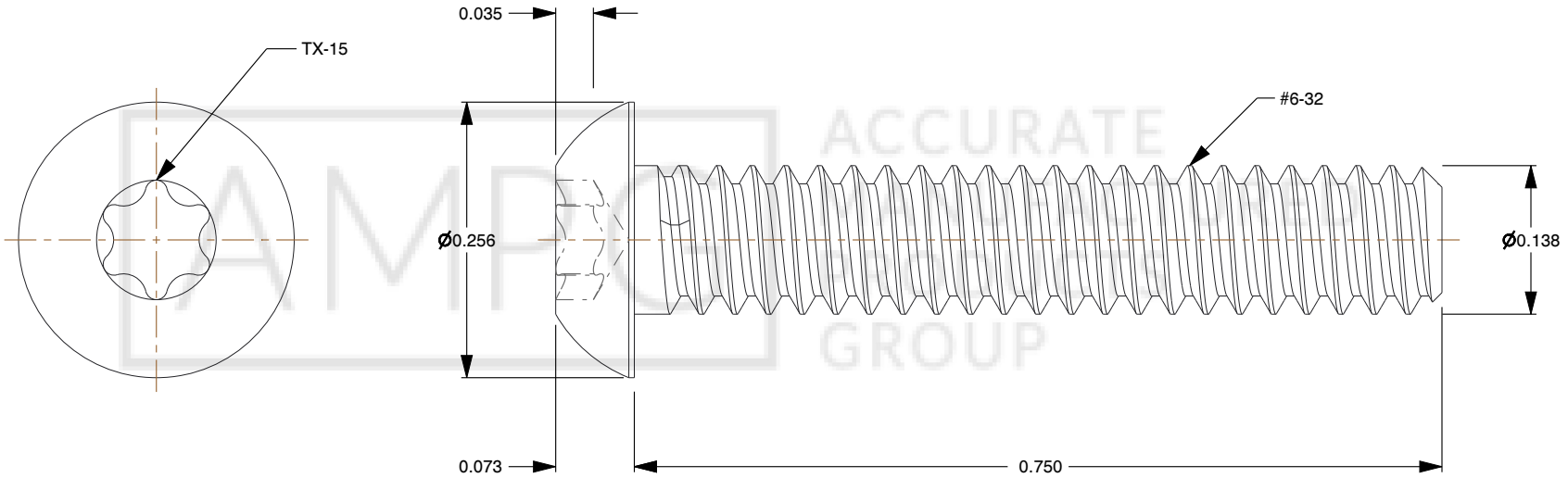

Notes:

1. **Category:** Socket Head Cap Screws
2. **System of Measurement:** Inch
3. **Head Style:** Button Head
4. **Drive Style:** 6Lobe Pin Drive
5. **Thread Length:** Full Thread
6. **Thread Direction:** Right-Hand Thread
7. **Material:** Stainless Steel
8. **Material Grade:** A-286 stainless steel
9. **Coating:** Uncoated

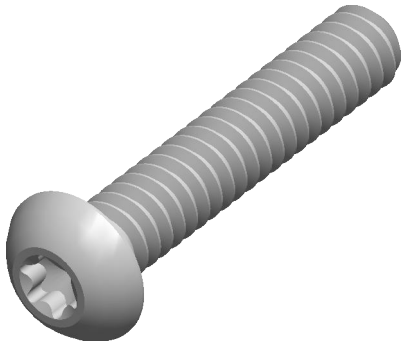

AMPG ACCURATE MANUFACTURED PRODUCTS GROUP

ampg.com

THIRD ANGLE PROJECTION

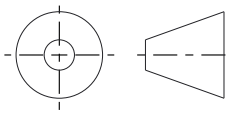

This file and the related information are provided for reference only and may change without notice. Accurate Manufactured Products Group Inc does not guarantee the accuracy, completeness, or suitability of this file or the information provided. You are responsible for how you use this file and its information.

This document is the property of Accurate Manufactured Products Group Inc. The information in it may not be copied, shared, or given to any third party without written permission from Accurate Manufactured Products Group Inc.

DESCRIPTION

6-32 X 3/4 Button Head Machine Screw.
262 Hd Dia, .073 Hd Ht,
T15 Six Lobe, A286 USA

TITLE

Cap Screws

Sheet Size	PART NUMBER	Rev.	ISSUED
A	131-286	01	2026-10-20

SCALE: 6.052

Unless otherwise specified Dimensions are in INCHES