ACXESS SPRING

Force that EMPOWERS

STOCK SPRING

sales@acxesspring.com Ph 951 276 2777
2225 E. Cooley Dr Colton, CA 92324
www.acxesspring.com

| | |
|---|---|
| Part Name: | Date: 06/02/2026 |
| Part #: in (Click to see Part # on Website) | PE105-1250-36333-SST-6000-CO-N-IN |
| Spring Type: Extension Spring | End Type: Cross-Over Hook |
| Finish: None | Direction of Wind: Right Hand |
| Material: Stainless 302 ASTM A313 | Spring Index (I): 10.905 |
| Weight / M: 350.287 Lbs | Length of W: 139.969 in |

| Physical Dimensions | IN | MM | Tolerances (in) |
|---|---|---|---|
| Wire Diameter (WD) | 0.105 in | [2.667 mm] | +/- 0.001 |
| Outer Diameter (OD) | 1.250 in | [31.750 mm] | +/- 0.025 |
| Mean Diameter (MD) | 1.145 in | [29.083 mm] | +/- 0.025 |
| Inner Diameter (ID) | 1.040 in | [26.416 mm] | +/- 0.025 |
| Length Inside Hooks (LIH) | 6.000 in | [152.400 mm] | +/- 0.200 |
| Body Length (BL) | 3.920 in | [99.568 mm] | +/- 0.100 |
| Hook Gap 1 (HG1) | 0.105 in | [2.667] mm | |
| Hook Gap 2 (HG2) | 0.105 in | [2.667] mm | |
| Hook Length 1 (HL1) | 1.040 in | [26.416] mm | |
| Hook Length 2 (HL2) | 1.040 in | [26.416] mm | |
| Total Hook Length (THL) | 2.080 in | [52.832] mm | |

| | | | |
|---|---|---|---|
| Spring Rate (K) | 2.77170 lbs/in | 0.485 N/mm | +/- 0.277 |
| Max Load (ML) | 30.593 lbf | 136.084 N | +/- 3.059 |
| Max Travel (MT) | 9.507 in | 241.485 mm | |
| Initial Tension (IT) | 4.242 lbf | 18.868 N | |
| Max Shear Stress Possible (t max) | 109040.000 PSI | 751804335.229 Pa | |
| Material Shear Modulus (G) | 9949475.938 PSI | 68599221788.087 Pa | |
| Wahl Correction Factor (W) | 1.132 | 1.132 | |

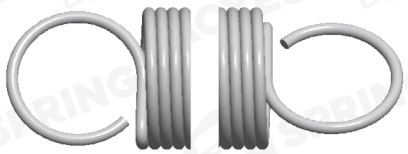

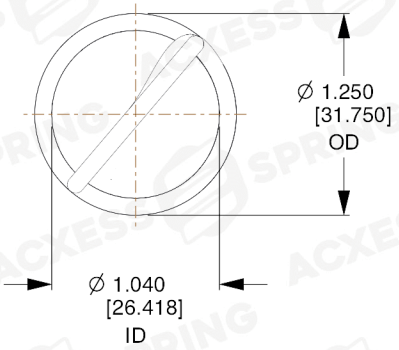


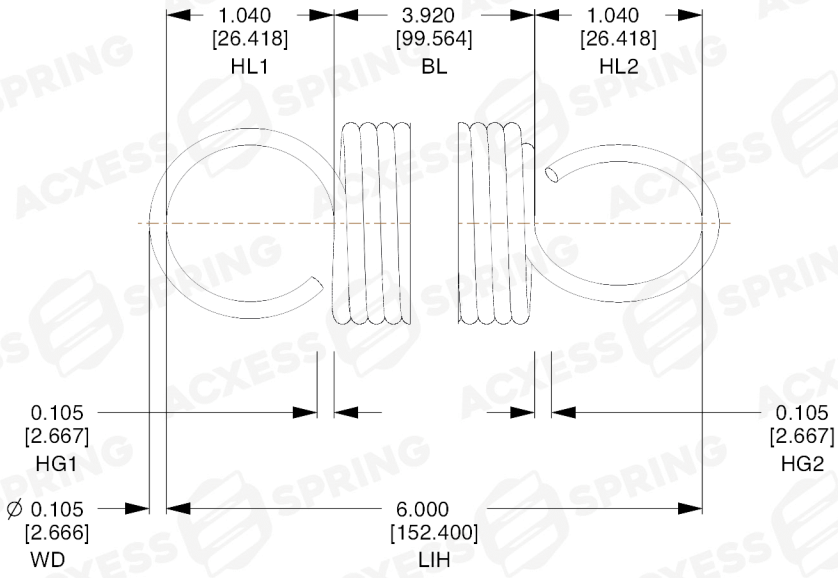


Note: Body Length, Total Coils, End Type and End Position is for reference only.

Notes

| Scale: 0.840 | Revision #: | Drawn By: | Approved By: |
|---|---|---|---|

This file and any associated information and specifications are provided for reference and evaluation purposes only, and is subject to change without notice. Acxess Spring makes no representations, warranties or guarantees as to the appropriateness, accuracy, completeness, or suitability for any purpose, of the file, information or specifications. You are solely responsible for the use of the file, information or specification.

This Drawing is the property of ACXESS SPRING
It may contain confidential, proprietary information, that is Acxess Spring property. Do not disclose to or duplicate for others except as authorized by Acxess Spring.