SPRING CREATOR 5.0
By ACXESS SPRING

Force that EMPOWERS

sales@springcreator.com Ph 951 276 2777
2225 E. Cooley Dr Colton, CA 92324
www.springcreator.com

Part Name:	Date: 06/02/2026
Part #: in (Click to see Part # on Website)	PE062-375-35258-MW-2750-SH-N-IN
Spring Type: Extension Spring	End Type: Side Hook
Finish: None	Direction of Wind: Right Hand
Material: Music Wire ASTM A228	Spring Index (I): 5.048
Weight / M: 31.859 Lbs	Length of W: 37.138 in



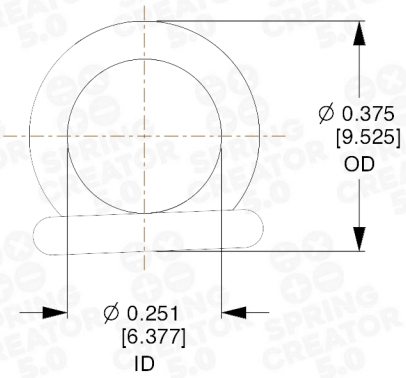

Physical Dimensions	IN	MM	Tolerances (in)
Wire Diameter (WD)	0.062 in	[1.575 mm]	+/- 0.001
Outer Diameter (OD)	0.375 in	[9.525 mm]	+/- 0.008
Mean Diameter (MD)	0.313 in	[7.950 mm]	+/- 0.008
Inner Diameter (ID)	0.251 in	[6.375 mm]	+/- 0.008
Length Inside Hooks (LIH)	2.750 in	[69.850 mm]	+/- 0.100
Body Length (BL)	2.248 in	[57.099 mm]	+/- 0.100
Hook Gap 1 (HG1)	0.062 in	[1.575] mm	
Hook Gap 2 (HG2)	0.062 in	[1.575] mm	
Hook Length 1 (HL1)	0.251 in	[6.375] mm	
Hook Length 2 (HL2)	0.251 in	[6.375] mm	
Total Hook Length (THL)	0.502 in	[12.751] mm	

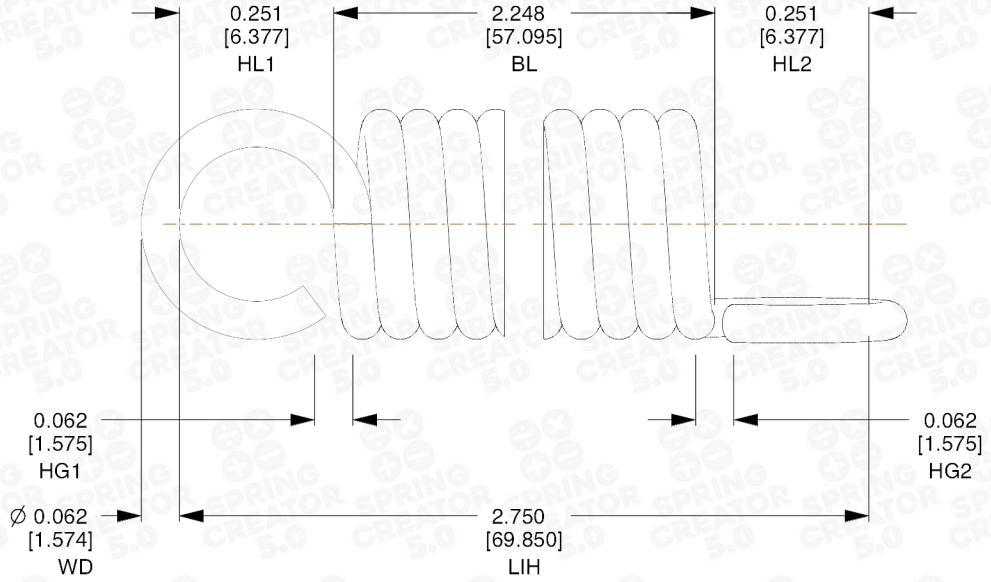

Spring Rate (K)	19.63440 lbs/in	3.439 N/mm	+/- 1.963
Max Load (ML)	24.317 lbf	108.165 N	+/- 2.432
Max Travel (MT)	0.937 in	23.800 mm	
Initial Tension (IT)	5.919 lbf	26.328 N	
Max Shear Stress Possible (t max)	139120.000 PSI	959198634.602 Pa	
Material Shear Modulus (G)	11492970.929 PSI	79241245134.131 Pa	
Wahl Correction Factor (W)	1.307	1.307	

Note: Body Length, Total Coils, End Type and End Position is for reference only.

Notes

Scale: 3.200	Revision #:	Drawn By:	Approved By:

This file and any associated information and specifications are provided for reference and evaluation purposes only, and is subject to change without notice. Acxess Spring makes no representations, warranties or guarantees as to the appropriateness, accuracy, completeness, or suitability for any purpose, of the file, information or specifications. You are solely responsible for the use of the file, information or specification.

This Drawing is the property of ACXESS SPRING
It may contain confidential, proprietary information, that is Acxess Spring property. Do not disclose to or duplicate for others except as authorized by Acxess Spring.