SPRING CREATOR 5.0
By ACXESS SPRING

Force that EMPOWERS

sales@springcreator.com Ph 951 276 2777
2225 E. Cooley Dr Colton, CA 92324
www.springcreator.com

Part Name:	Date: 06/02/2026
Part #: in (Click to see Part # on Website)	PE148-1750-40162-SST-9000-CO-N-IN
Spring Type: Extension Spring	End Type: Cross-Over Hook
Finish: None	Direction of Wind: Right Hand
Material: Stainless 302 ASTM A313	Spring Index (I): 10.824
Weight / M: 1069.507 Lbs	Length of W: 215.102 in

Physical Dimensions	IN	MM	Tolerances (in)
Wire Diameter (WD)	0.148 in	[3.759 mm]	+/- 0.001
Outer Diameter (OD)	1.750 in	[44.450 mm]	+/- 0.040
Mean Diameter (MD)	1.602 in	[40.691 mm]	+/- 0.040
Inner Diameter (ID)	1.454 in	[36.932 mm]	+/- 0.040
Length Inside Hooks (LIH)	9.000 in	[228.600 mm]	+/- 0.300
Body Length (BL)	6.092 in	[154.737 mm]	+/- 0.200
Hook Gap 1 (HG1)	0.148 in	[3.759] mm	
Hook Gap 2 (HG2)	0.148 in	[3.759] mm	
Hook Length 1 (HL1)	1.454 in	[36.932] mm	
Hook Length 2 (HL2)	1.454 in	[36.932] mm	
Total Hook Length (THL)	2.908 in	[73.863] mm	

Spring Rate (K)	3.61370 lbs/in	0.633 N/mm	+/- 0.361
Max Load (ML)	55.370 lbf	246.297 N	+/- 5.537
Max Travel (MT)	12.956 in	329.072 mm	
Initial Tension (IT)	8.552 lbf	38.040 N	
Max Shear Stress Possible (t max)	98700.000 PSI	680512544.819 Pa	
Material Shear Modulus (G)	9949475.938 PSI	68599221788.087 Pa	
Wahl Correction Factor (W)	1.133	1.133	



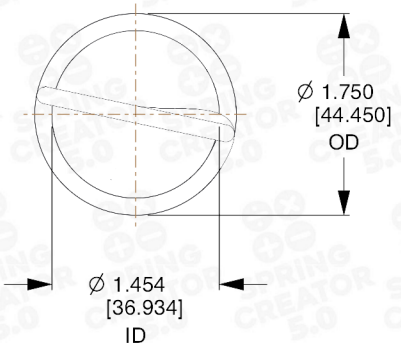

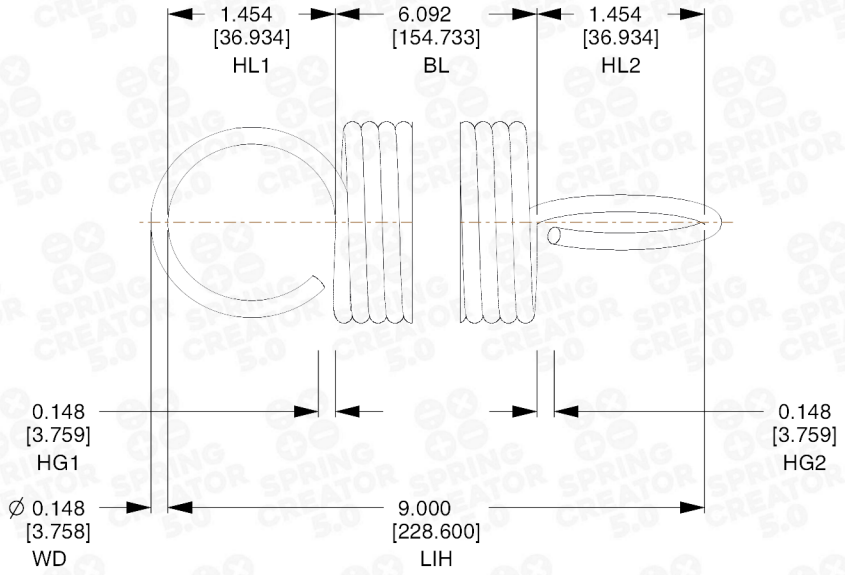

Note: Body Length, Total Coils, End Type and End Position is for reference only.

Notes

Scale: 0.600	Revision #:	Drawn By:	Approved By:

This file and any associated information and specifications are provided for reference and evaluation purposes only, and is subject to change without notice. Acxess Spring makes no representations, warranties or guarantees as to the appropriateness, accuracy, completeness, or suitability for any purpose, of the file, information or specifications. You are solely responsible for the use of the file, information or specification.

This Drawing is the property of ACXESS SPRING
It may contain confidential, proprietary information, that is Acxess Spring property. Do not disclose to or duplicate for others except as authorized by Acxess Spring.