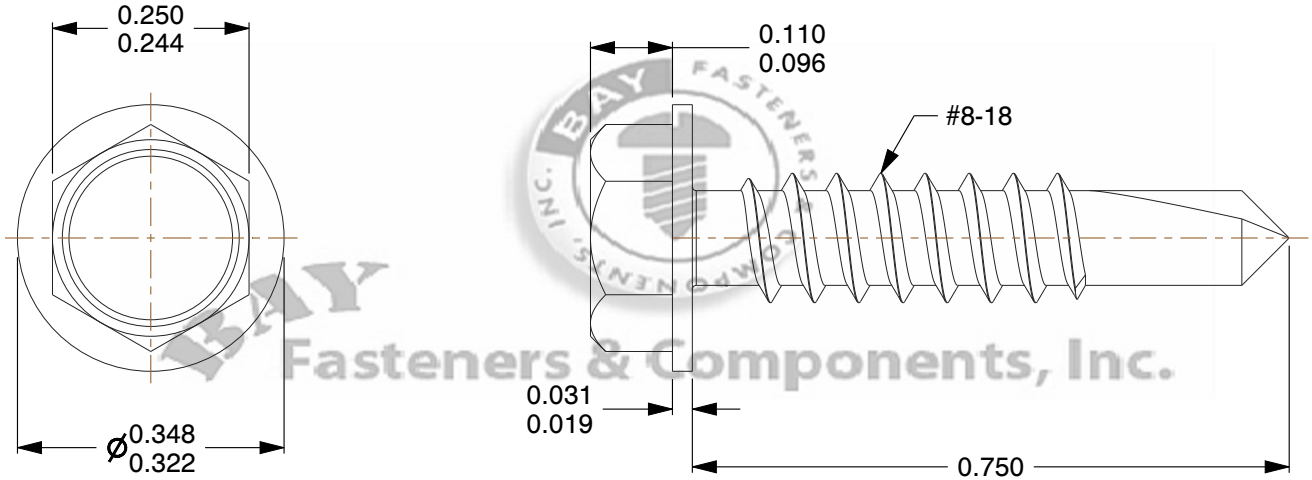

BAY Fasteners & Components, Inc.

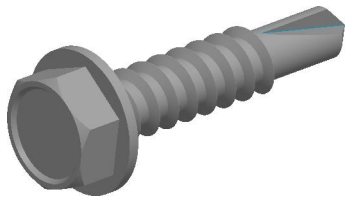

Notes:

1. **Diameter:** #8
2. **Thread Form:** #8-18
3. **Head Style:** Hex Washer Head
4. **Drill Point:** #2
5. **Finish:** Electro-zinc

BAY Fasteners & Components, Inc.
www.bayfasteners.com

THIRD ANGLE PROJECTION

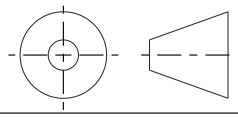

This file and the related information are provided for reference only and may change without notice. Bay Fasteners & Components, Inc. does not guarantee the accuracy, completeness, or suitability of this file or the information provided. You are responsible for how you use this file and its information.

This document is the property of Bay Fasteners & Components, Inc. The information in it may not be copied, shared, or given to any third party without written permission from Bay Fasteners & Components, Inc.

DESCRIPTION

TEKS Self-Drilling Fasteners 8-18 x 3/4''

TITLE

Sheet Size	PART NUMBER	Rev.	ISSUED
A	1200200	01	2026-10-20

SCALE: 4.145

Unless otherwise specified Dimensions are in INCHES