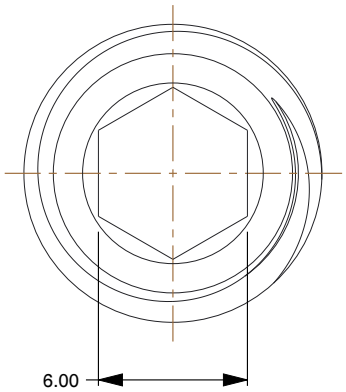

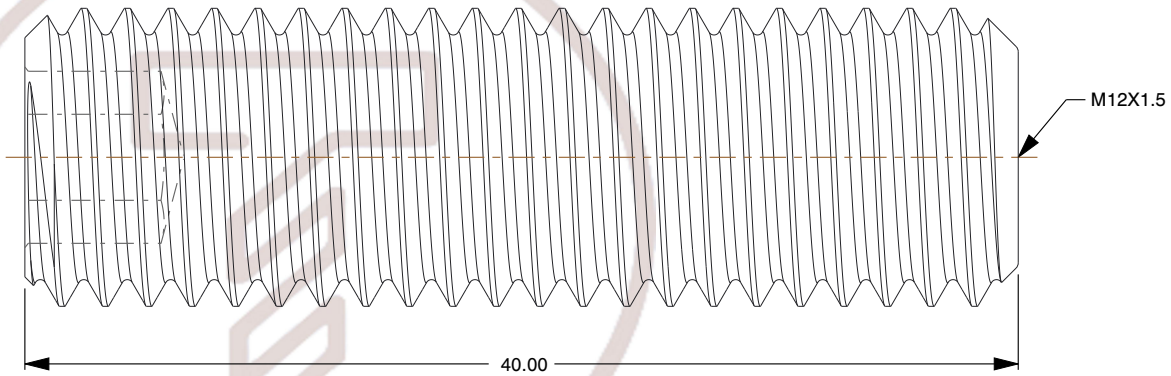

Notes:

1. **Diameter & Thread / Width:** 12MM - 1.75
2. **Finish (coating):** PLAIN
3. **Grade / Class (metric):** ALLOY
4. **Head Style / Add-On's:** SOCKET
5. **Length / Thickness:** 40MM
6. **Material:** STEEL
7. **Type Item:** SCREW SOCKET SET FLAT

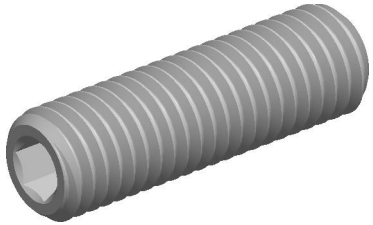

www.boltsplus.com

THIRD ANGLE PROJECTION

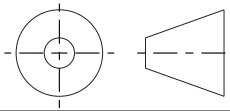

This file and the related information are provided for reference only and may change without notice. TOREC Screws does not guarantee the accuracy, completeness, or suitability of this file or the information provided. You are responsible for how you use this file and its information.

This document is the property of TOREC Screws. The information in it may not be copied, shared, or given to any third party without written permission from TOREC Screws.

DESCRIPTION

12MM - 1.75 X 40MM PLAIN ALLOY STEEL
FLAT SOCKET SET SCREW

TITLE

Set Screws

Sheet Size	PART NUMBER	Rev.	ISSUED
A	MSS1217540F	01	2026-10-27

SCALE: 3.285

Unless otherwise specified Dimensions are in MILLIMETERS