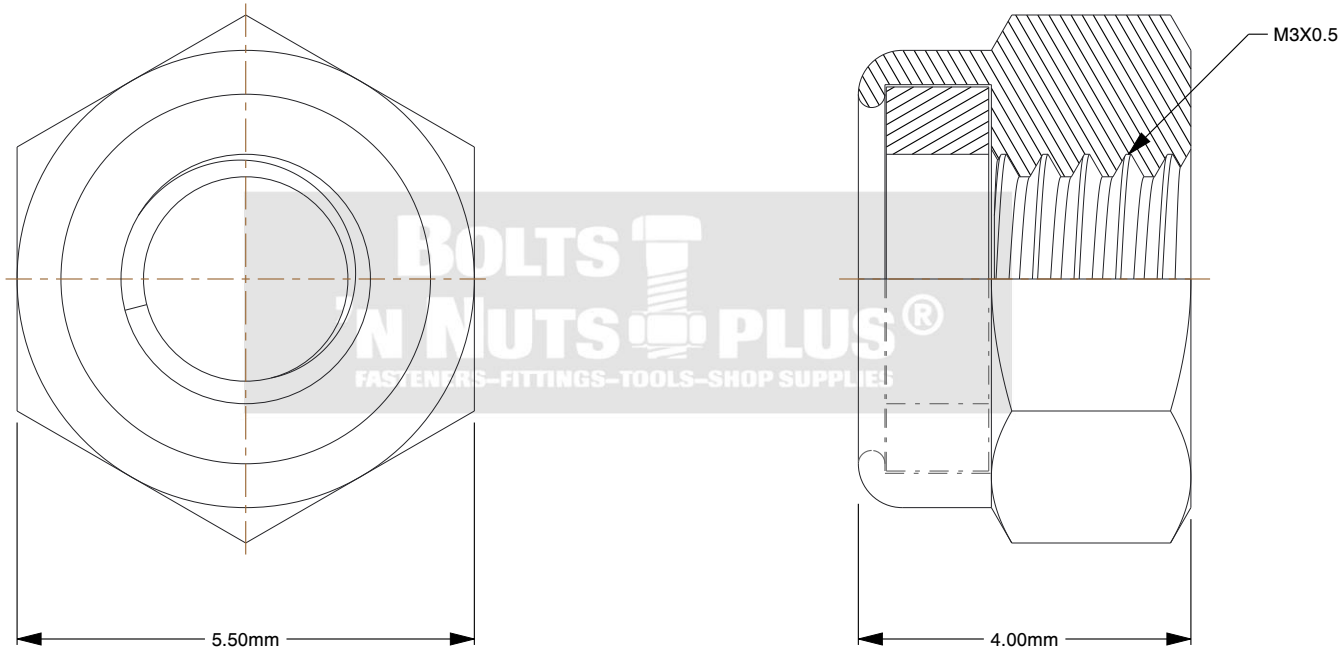

BOLTS 'N NUTS PLUS®
FASTENERS–FITTINGS–TOOLS–SHOP SUPPLIES

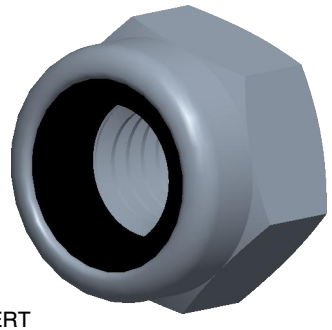

Notes:

1. **Diameter & Thread / Width:** 3MM - .5
2. **Finish (coating):** ZINC PLATED
3. **Grade / Class (metric):** 8
4. **Head Style / Add-On's:** HEX FINISHED LOCK NYLON INSERT
5. **Material:** STEEL
6. **Type Item:** NUT

BOLTS 'N NUTS PLUS®
FASTENERS–FITTINGS–TOOLS–SHOP SUPPLIES

www.boltsplus.com

THIRD ANGLE PROJECTION

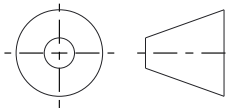

This file and the related information are provided for reference only and may change without notice. Bolts and Nuts Plus does not guarantee the accuracy, completeness, or suitability of this file or the information provided. You are responsible for how you use this file and its information.

This document is the property of Bolts and Nuts Plus. The information in it may not be copied, shared, or given to any third party without written permission from Bolts and Nuts Plus.

TITLE	DESCRIPTION
Nylon Locking Nut	3MM - .5 ZINC PLATED CLASS 8 FINISHED HEX NYLON INSERT LOCK NUT

Sheet Size	PART NUMBER	Rev.	ISSUED
A	MLN35	01	2026-10-27

SCALE: 10.999	Unless otherwise specified Dimensions are in MILLIMETERS