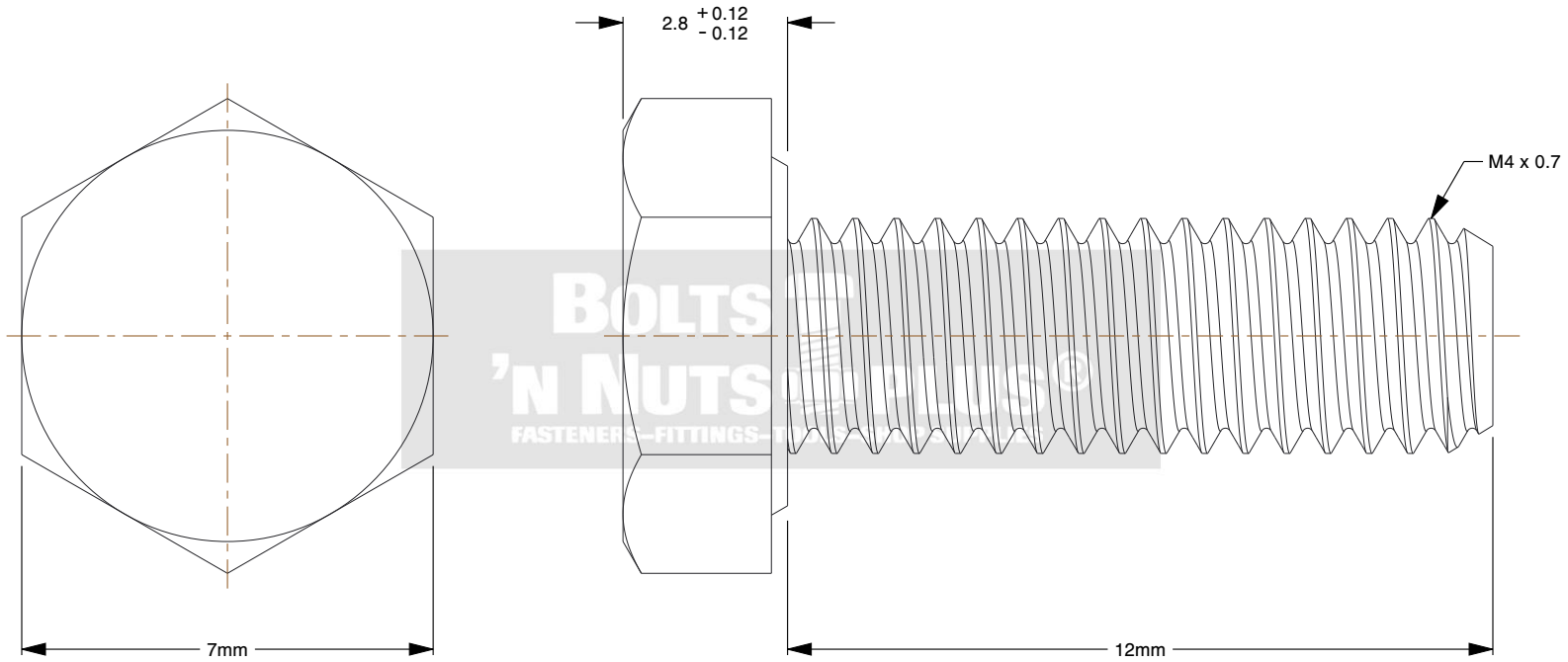

BOLTS 'N NUTS PLUS®
FASTENERS–FITTINGS–TOOLS–SHOP SUPPLIES

Notes:

1. **Diameter & Thread / Width:** 4MM-.7
2. **Grade / Class (metric):** A2 18-8
3. **Head Style / Add-On's:** HEX FINISHED
4. **Length / Thickness:** 12MM
5. **Material:** STAINLESS
6. **Type Item:** BOLT DIN 933 FULL THREAD

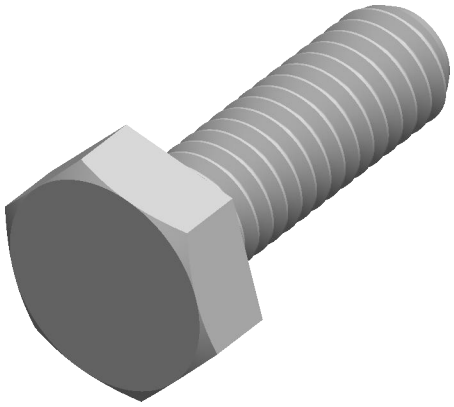

BOLTS 'N NUTS PLUS®
FASTENERS–FITTINGS–TOOLS–SHOP SUPPLIES

www.boltsplus.com

THIRD ANGLE PROJECTION

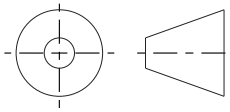

This file and the related information are provided for reference only and may change without notice. Bolts and Nuts Plus does not guarantee the accuracy, completeness, or suitability of this file or the information provided. You are responsible for how you use this file and its information.

This document is the property of Bolts and Nuts Plus. The information in it may not be copied, shared, or given to any third party without written permission from Bolts and Nuts Plus.

TITLE	DESCRIPTION
Hex Bolts	4MM - .7 X 12MM A2 18-8 STAINLESS DIN 933 FULL THREAD FINISHED HEX HEAD CAP SCREW

Sheet Size	PART NUMBER	Rev.	ISSUED
A	MHC4712FTS	01	2026-10-20

SCALE: 7.865	Unless otherwise specified Dimensions are in MILLIMETERS