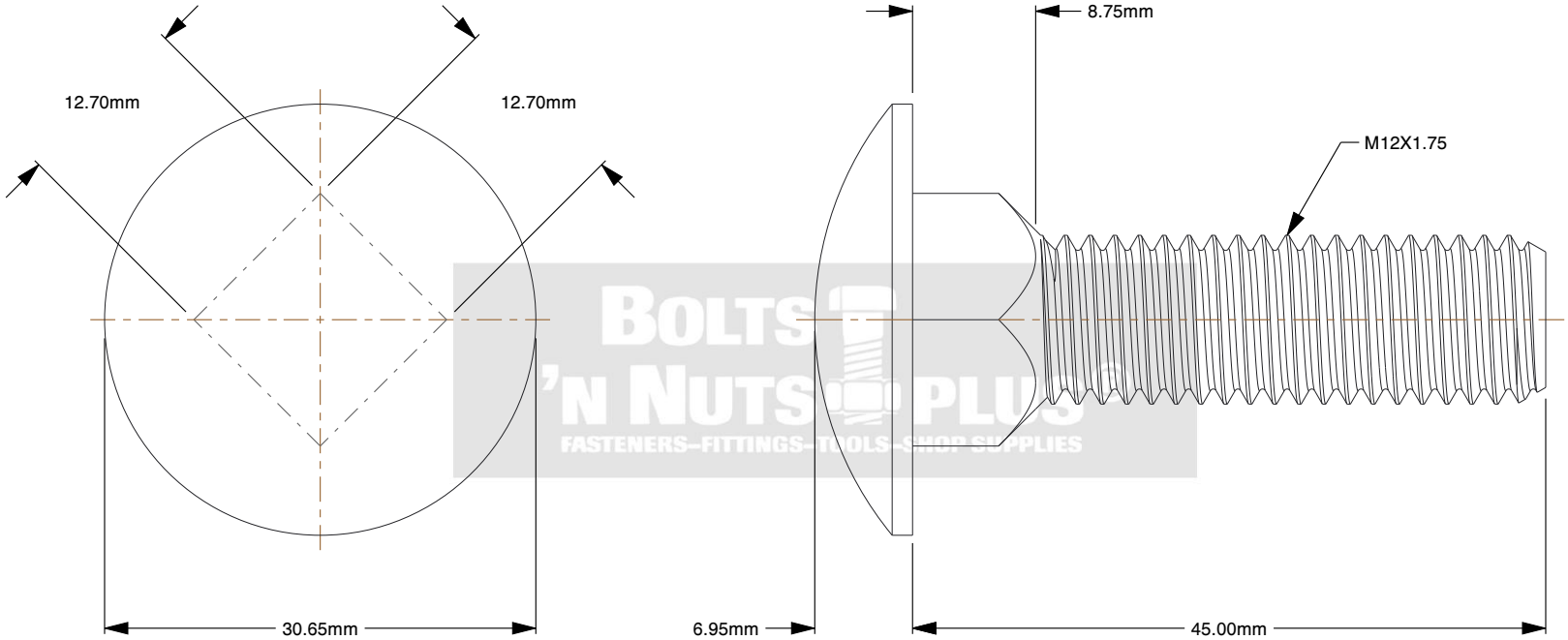

BOLTS 'N NUTS PLUS
FASTENERS–FITTINGS–TOOLS–SHOP SUPPLIES

Notes:

1. **Diameter & Thread / Width:** 12MM - 1.75
2. **Finish (coating):** PLAIN
3. **Grade / Class (metric):** 8.8
4. **Head Style / Add-On's:** CARRIAGE
5. **Length / Thickness:** 45MM
6. **Material:** STEEL
7. **Type Item:** BOLT
8. **Sulfur (S):** less than or equal to 0.03%

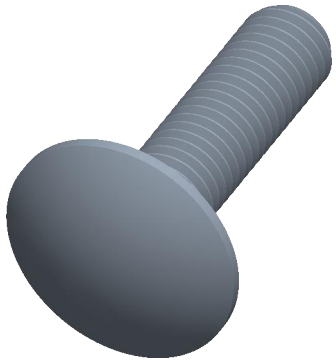

BOLTS 'N NUTS PLUS®
FASTENERS–FITTINGS–TOOLS–SHOP SUPPLIES

www.boltsplus.com

THIRD ANGLE PROJECTION

This file and the related information are provided for reference only and may change without notice. TOREC Screws does not guarantee the accuracy, completeness, or suitability of this file or the information provided. You are responsible for how you use this file and its information.

This document is the property of TOREC Screws. The information in it may not be copied, shared, or given to any third party without written permission from TOREC Screws.

DESCRIPTION

12MM - 1.75 X 45MM PLAIN GRADE 8.8 CARRIAGE BOLT

TITLE

Carriage Bolts

Sheet Size	PART NUMBER	Rev.	ISSUED
A	MCB1217545B	01	2026-10-20

SCALE: 1.922

Unless otherwise specified Dimensions are in MILLIMETERS