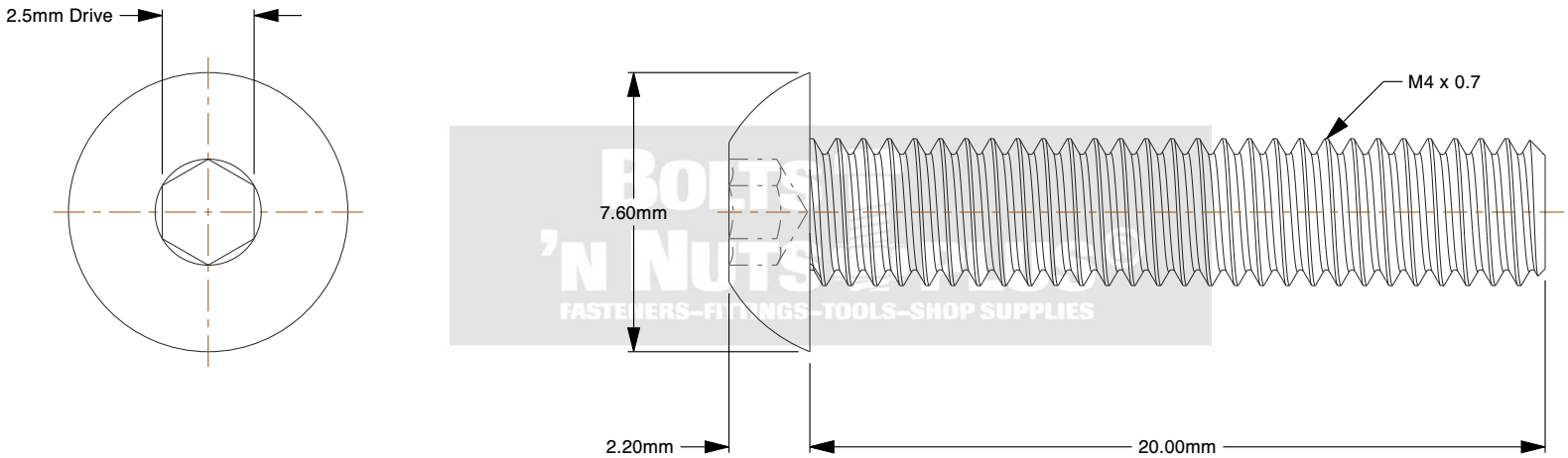

BOLTS 'N NUTS PLUS
FASTENERS–FITTINGS–TOOLS–SHOP SUPPLIES

Notes:

1. **Diameter & Thread / Width:** 4MM - .7
2. **Finish (coating):** PLAIN
3. **Grade / Class (metric):** ALLOY
4. **Head Style / Add-On's:** BUTTON
5. **Length / Thickness:** 20MM
6. **Material:** STEEL
7. **Type Item:** SOCKET CAP

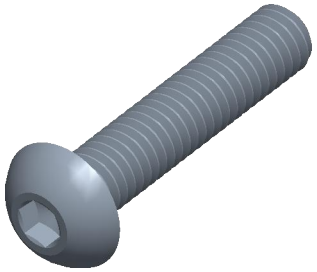

BOLTS 'N NUTS PLUS®
FASTENERS–FITTINGS–TOOLS–SHOP SUPPLIES

www.boltsplus.com

THIRD ANGLE PROJECTION

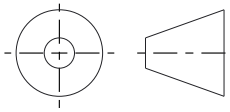

This file and the related information are provided for reference only and may change without notice. Bolts and Nuts Plus does not guarantee the accuracy, completeness, or suitability of this file or the information provided. You are responsible for how you use this file and its information.

This document is the property of Bolts and Nuts Plus. The information in it may not be copied, shared, or given to any third party without written permission from Bolts and Nuts Plus.

TITLE	DESCRIPTION
Button Head	4MM - .7 X 20MM PLAIN ALLOY STEEL FULL THREAD BUTTON HEAD SOCKET CAP SCREW

Sheet Size	PART NUMBER	Rev.	ISSUED
A	MBSCS4720FT	01	2026-10-20

SCALE: 4.901	Unless otherwise specified Dimensions are in MILLIMETERS