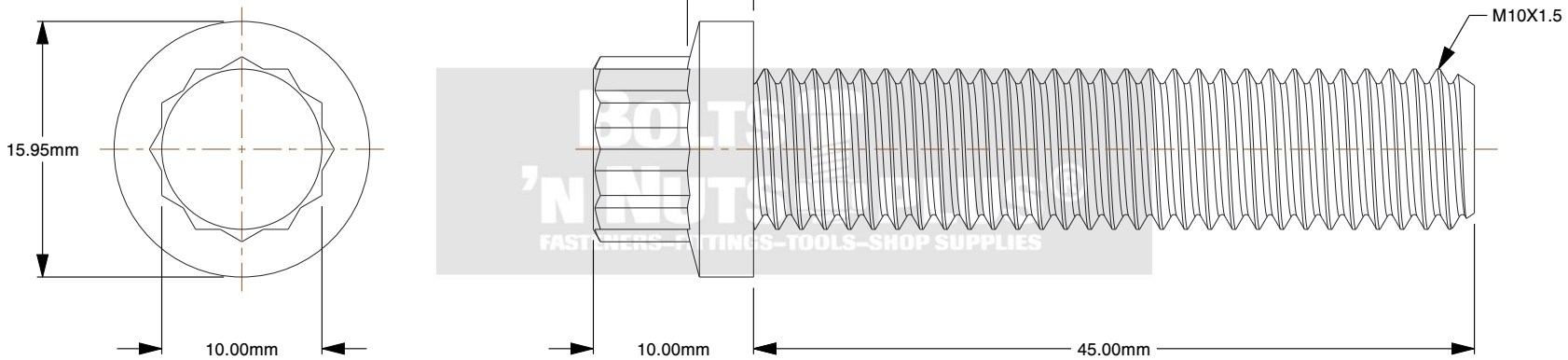


BOLTS 'N NUTS PLUS
FASTENERS–FITTINGS–TOOLS–SHOP SUPPLIES

Notes:

1. **Diameter & Thread / Width:** 10MM - 1.5
2. **Finish (coating):** PLAIN
3. **Grade / Class (metric):** ALLOY
4. **Head Style / Add-On's:** 12 POINT FLANGE SMOOTH
5. **Length / Thickness:** 45MM
6. **Material:** STEEL
7. **Type Item:** BOLT

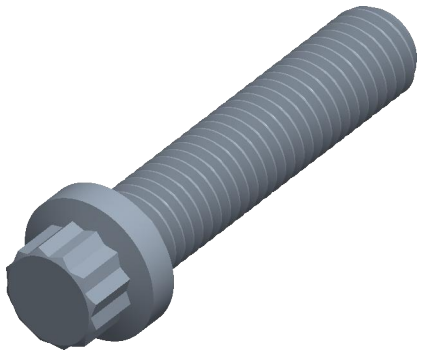

THIRD ANGLE PROJECTION

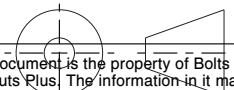

BOLTS 'N NUTS PLUS®
FASTENERS–FITTINGS–TOOLS–SHOP SUPPLIES
www.boltsplus.com

This file and the related information are provided for reference only and may change without notice. Bolts and Nuts Plus does not guarantee the accuracy, completeness, or suitability of this file or the information provided. You are responsible for how you use this file and its information.

This document is the property of Bolts and Nuts Plus. The information in it may not be copied, shared, or given to any third party without written permission from Bolts and Nuts Plus.

| TITLE | PART NUMBER |
|---|---|
| 12-Point Flange Bolts | M12PCS101545 |

| PART NUMBER | DESCRIPTION |
|---|---|
| M12PCS101545 | 10MM - 1.5 X 45MM PLAIN ALLOY STEEL<br>12 POINT SMOOTH FLANGE (FERRY) BOLT |

| Sheet Size | Design Code | Drawing No. | Rev. | ISSUED |
|---|---|---|---|---|
| A | 001 | 10001 | 01 | 2026-10-20 |

| SCALE: 2.273 | Unless otherwise specified Dimensions are in INCHES |
|---|---|