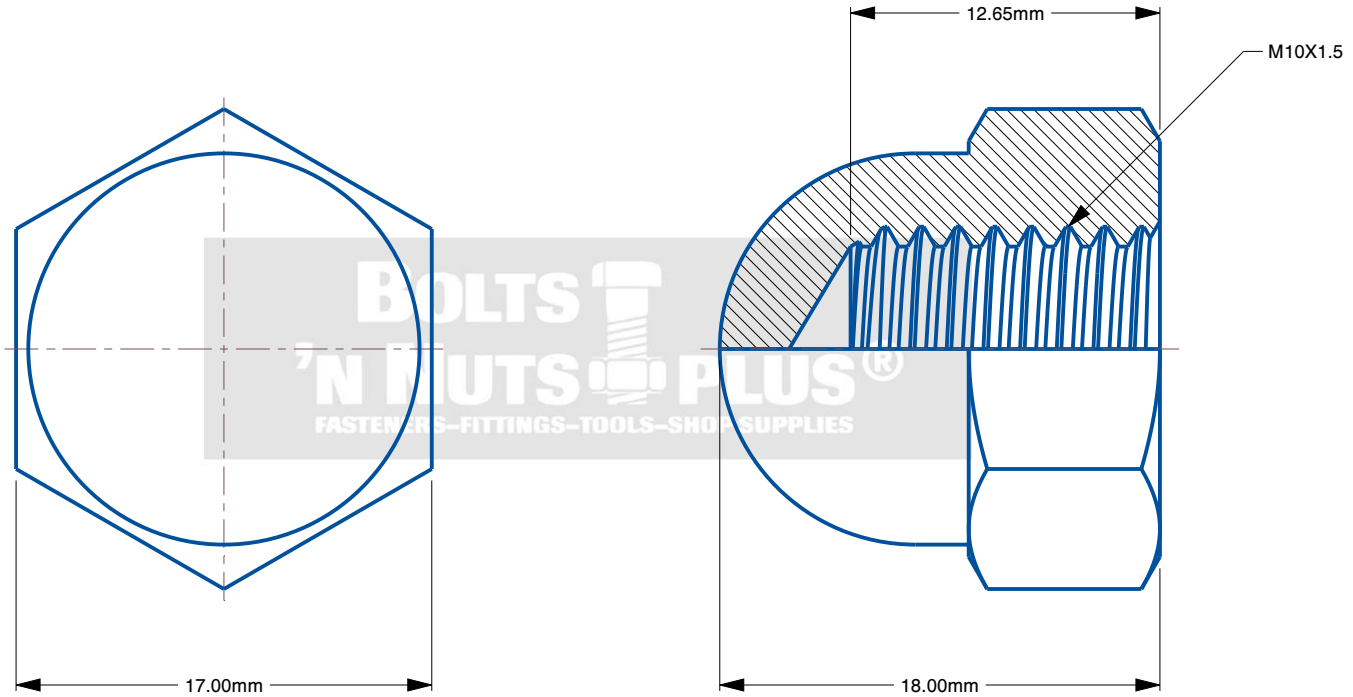

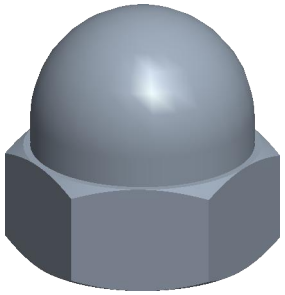

Notes:

1. **Diameter & Thread / Width:** 10MM - 1.5
2. **Grade / Class (metric):** 18-8
3. **Head Style / Add-On's:** ACORN
4. **Material:** STAINLESS
5. **Type Item:** NUT

BOLTS 'N NUTS PLUS®
FASTENERS–FITTINGS–TOOLS–SHOP SUPPLIES

www.boltsplus.com

THIRD ANGLE PROJECTION

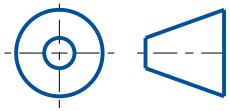

This file and the related information are provided for reference only and may change without notice. Bolts and Nuts Plus does not guarantee the accuracy, completeness, or suitability of this file or the information provided. You are responsible for how you use this file and its information.

This document is the property of Bolts and Nuts Plus. The information in it may not be copied, shared, or given to any third party without written permission from Bolts and Nuts Plus.

TITLE	DESCRIPTION
Acorn Nut	10MM - 1.5 18-8 STAINLESS ACORN NUT

Sheet Size	PART NUMBER	Rev.	ISSUED
A	MACN1015S	01	2026-10-22

SCALE: 3.235	Unless otherwise specified Dimensions are in MILLIMETERS