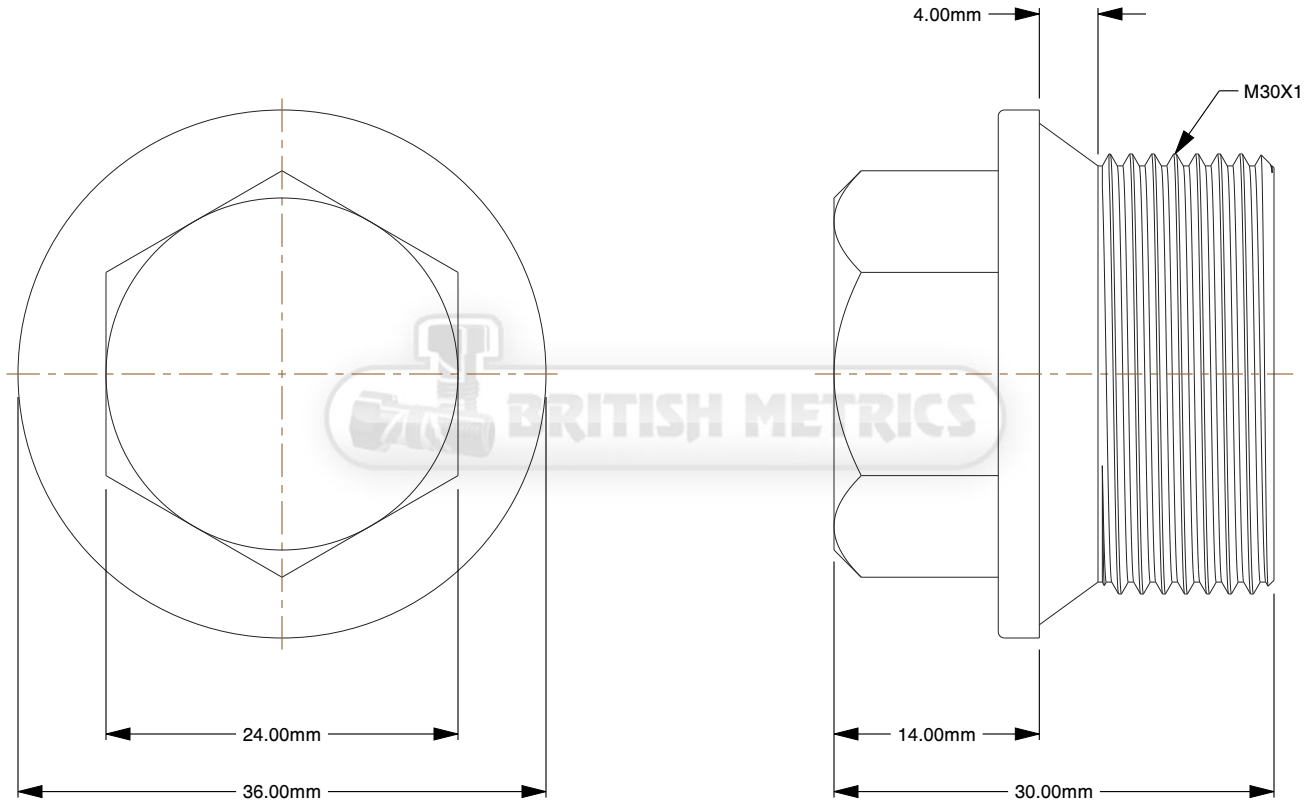

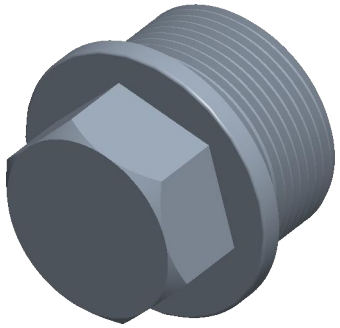

Notes:

1. **Diameter:** 30 x 1.5
2. **DIN / ISO:** DIN 910
3. **Material:** Steel
4. **Finish:** Plain

BRITISH METRICS

www.britishmetrics.com

THIRD ANGLE PROJECTION

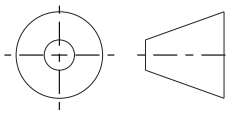

This file and the related information are provided for reference only and may change without notice. British Metrics does not guarantee the accuracy, completeness, or suitability of this file or the information provided. You are responsible for how you use this file and its information.

This document is the property of British Metrics. The information in it may not be copied, shared, or given to any third party without written permission from British Metrics.

TITLE	DESCRIPTION
External Hex Drain Plug	Flanged hex head plug to DIN 910 with 5.8 hardness

Sheet Size	PART NUMBER	Rev.	ISSUED
A	910-30X1-5	01	2026-10-20

SCALE: 1.940	Unless otherwise specified Dimensions are in MILLIMETERS