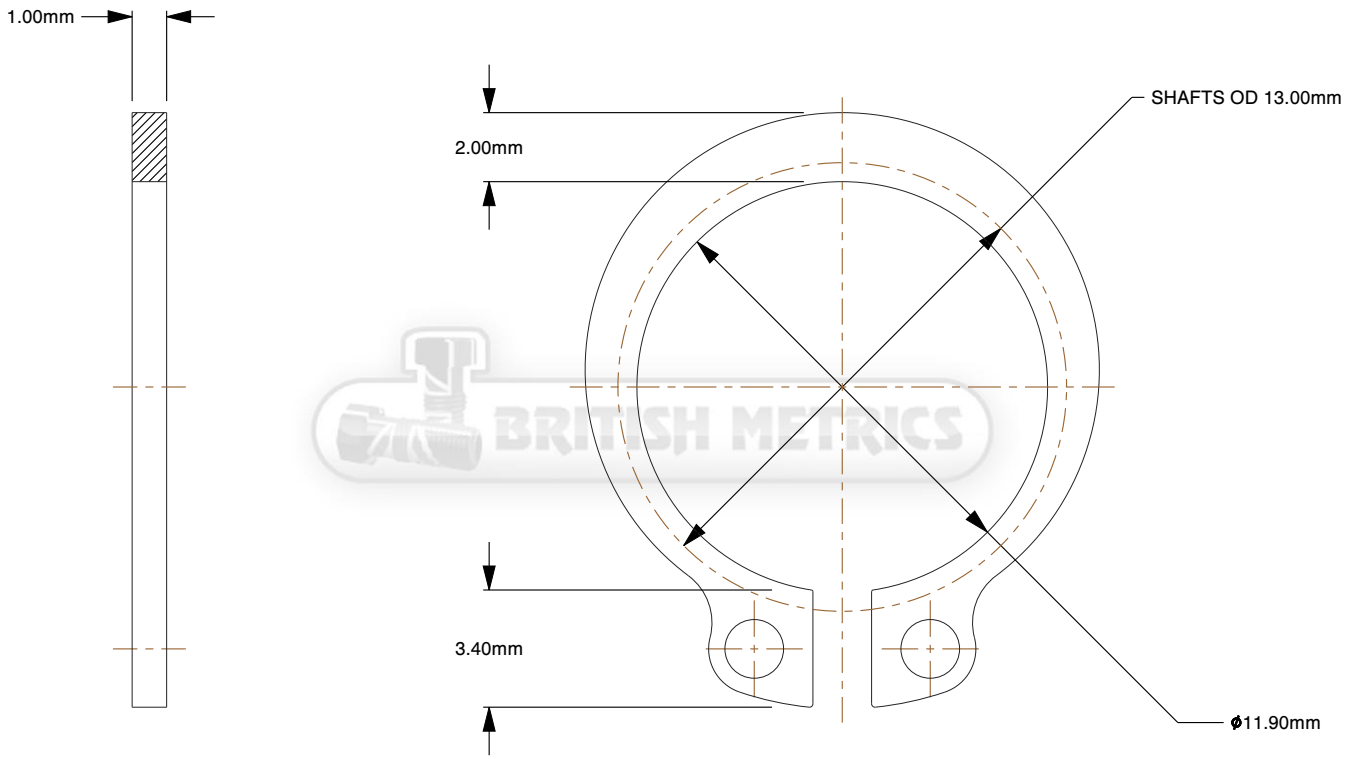

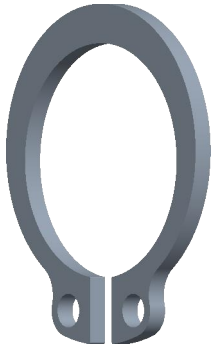

Notes:

1. **ID:** 11.9mm
2. **Thickness:** 1mm

BRITISH METRICS

www.britishmetrics.com

THIRD ANGLE PROJECTION

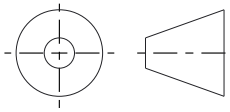

This file and the related information are provided for reference only and may change without notice. British Metrics does not guarantee the accuracy, completeness, or suitability of this file or the information provided. You are responsible for how you use this file and its information.

This document is the property of British Metrics. The information in it may not be copied, shared, or given to any third party without written permission from British Metrics.

TITLE	DESCRIPTION
External Retaining Ring	Metric steel 13mm external retaining ring for shaft applications to DIN 471

Sheet Size	PART NUMBER	Rev.	ISSUED
A	BN818-13	01	2026-10-20

SCALE: 4.565	Unless otherwise specified Dimensions are in MILLIMETERS