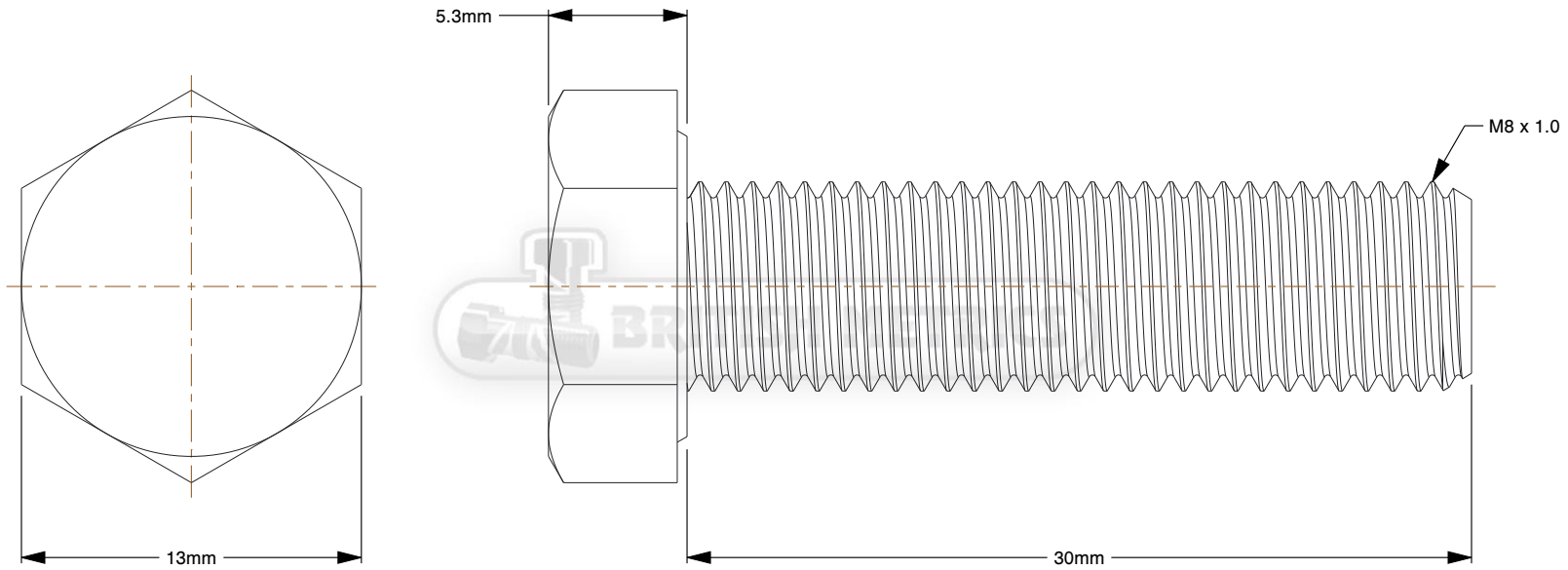


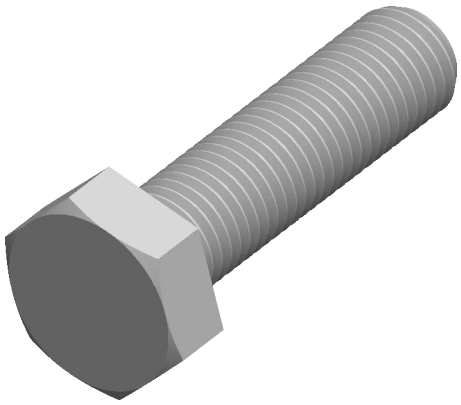

Notes:

1. **Size:** M8x1
2. **Fastener Thread:** 30
3. **Material:** A2 stainless steel

| | |
|---|---|
| BRITISH METRICS<br>www.britishmetrics.com | THIRD ANGLE PROJECTION |
| This file and the related information are provided for reference only and may change without notice. British Metrics does not guarantee the accuracy, completeness, or suitability of this file or the information provided. You are responsible for how you use this file and its information. | This document is the property of British Metrics. The information in it may not be copied, shared, or given to any third party without written permission from British Metrics. |
| TITLE<br>Hex Bolts | DESCRIPTION<br>DIN 961 fully threaded hex head screw, metric fine threads in A2 stainless steel<br>DIN 961 |

| Sheet Size | PART NUMBER | Rev. | ISSUED |
|---|---|---|---|
| A | 961-A2-8X1X30 | 01 | 2026-10-20 |
| SCALE: 3.550 | Unless otherwise specified Dimensions are in MILLIMETERS | | |