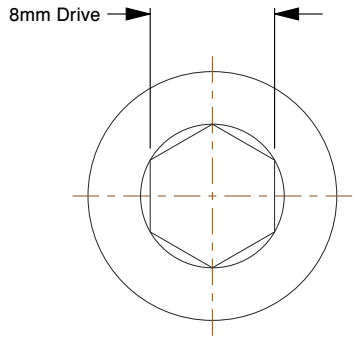

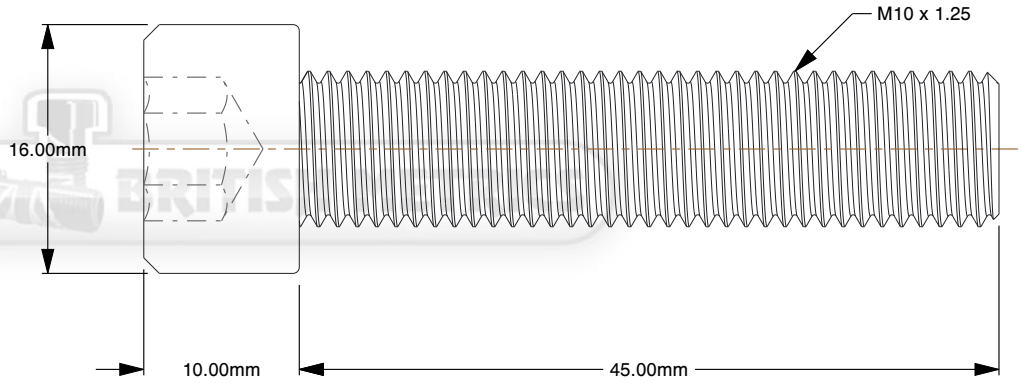

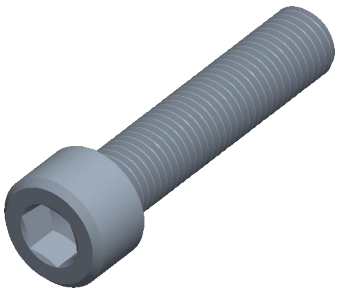

Notes:

1. **Size:** M10x1.25
2. **Fastener Thread:** 45
3. **Material:** 304 stainless steel

BRITISH METRICS

www.britishmetrics.com

THIRD ANGLE PROJECTION

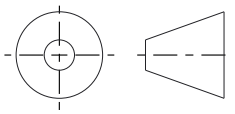

This file and the related information are provided for reference only and may change without notice. British Metrics does not guarantee the accuracy, completeness, or suitability of this file or the information provided. You are responsible for how you use this file and its information.

This document is the property of British Metrics. The information in it may not be copied, shared, or given to any third party without written permission from British Metrics.

TITLE	DESCRIPTION
Socket Head Bolts	DIN 912 socket head screw with fine threads in 304 stainless steel

Sheet Size	PART NUMBER	Rev.	ISSUED
A	BN610-10X1-25X45	01	2026-10-20

SCALE: 2.057	Unless otherwise specified Dimensions are in MILLIMETERS