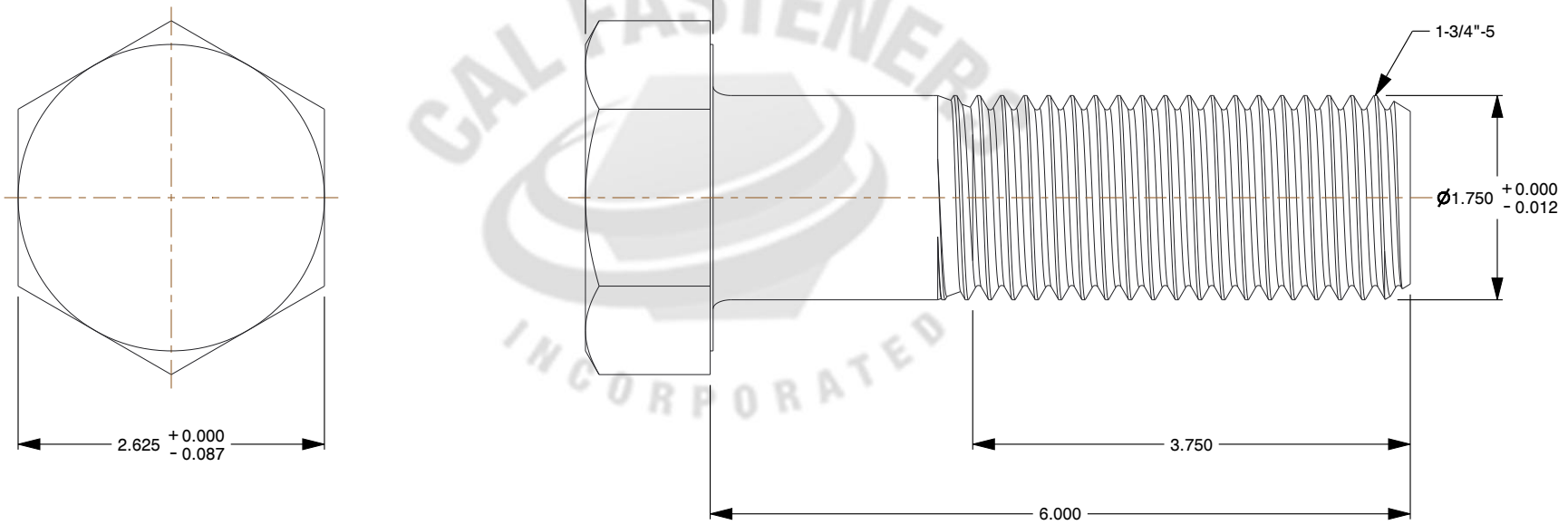

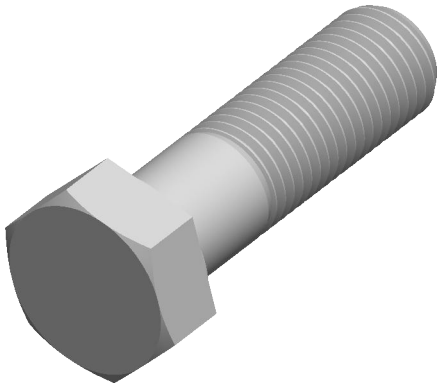

Notes:

1. **Diameter & Thread:** 1 3/4"-5
2. **Length:** 6"
3. **Finish:** Plain

CAL FASTENERS INCORPORATED

www.cfi1.com

THIRD ANGLE PROJECTION

This file and the related information are provided for reference only and may change without notice. Cal-Fasteners Inc does not guarantee the accuracy, completeness, or suitability of this file or the information provided. You are responsible for how you use this file and its information.

This document is the property of Cal-Fasteners Inc. The information in it may not be copied, shared, or given to any third party without written permission from Cal-Fasteners Inc.

TITLE	DESCRIPTION
Hex Bolts	Hex Bolts, A307 Grade A, Plain, Low Carbon (Inch)

Sheet Size	PART NUMBER	Rev.	ISSUED
A	175C600HCS-A307A	01	2026-10-19

SCALE: 0.671 | Unless otherwise specified Dimensions are in INCHES