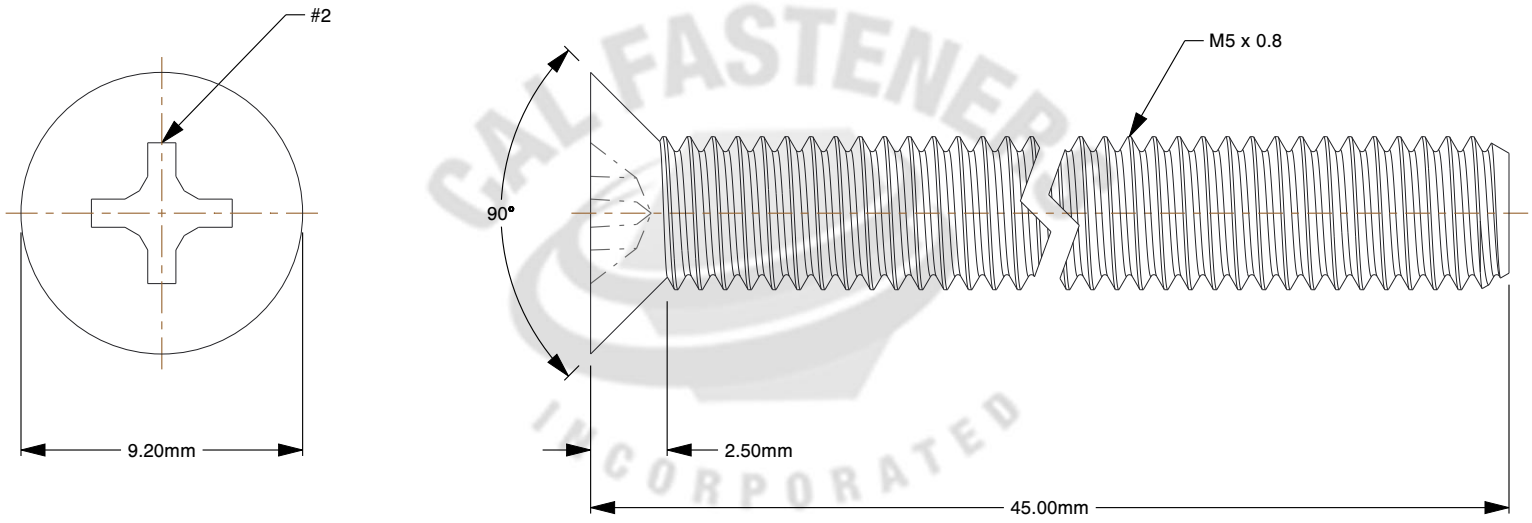

CAL FASTENERS INCORPORATED

Notes:

1. **Size:** M5-0.80
2. **DIAMETER:** M5
3. **Fastener Length:** 45 MM
4. **Fastener Thread:** COARSE
5. **Plating:** ZINC CR + 3
6. **Sulfur (S):** less than or equal to 0.03%

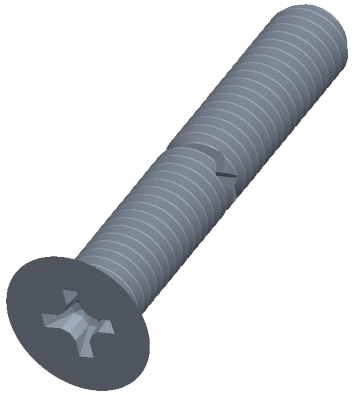

www.cfi1.com	THIRD ANGLE PROJECTION
This file and the related information are provided for reference only and may change without notice. TOREC Screws does not guarantee the accuracy, completeness, or suitability of this file or the information provided. You are responsible for how you use this file and its information.	This document is the property of TOREC Screws. The information in it may not be copied, shared, or given to any third party without written permission from TOREC Screws.
DESCRIPTION Metric DIN 965A Class 4.8 Machine Screw, Flat Head Phillips, Zinc CR + 3	TITLE Flat Head Screws

Sheet Size	PART NUMBER	Rev.	ISSUED
A	663111	01	2026-10-20

SCALE: 4.050	Unless otherwise specified Dimensions are in MILLIMETERS