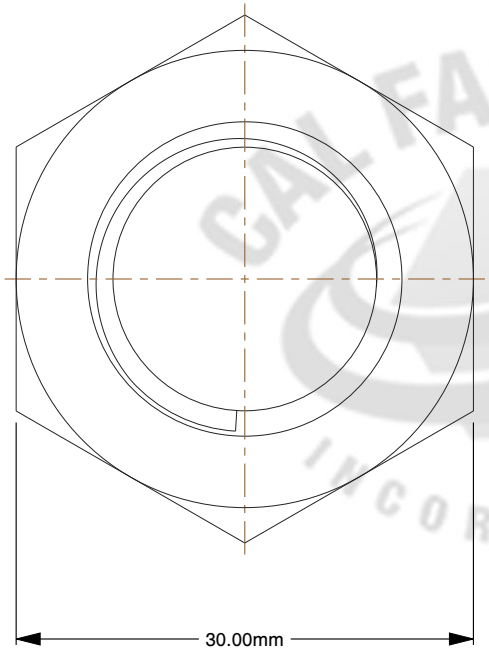

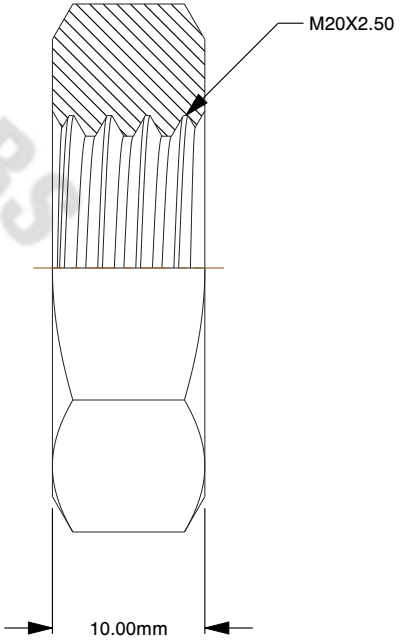

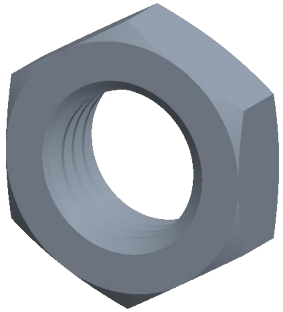

Notes:

1. **Size:** M20-2.50
2. **Diameter:** M20
3. **Fastener Thread:** COARSE
4. **Plating:** ZINC CR + 3

www.cfi1.com

THIRD ANGLE PROJECTION

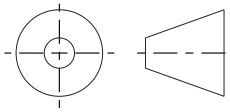

This file and the related information are provided for reference only and may change without notice. Cal-Fasteners Inc does not guarantee the accuracy, completeness, or suitability of this file or the information provided. You are responsible for how you use this file and its information.

This document is the property of Cal-Fasteners Inc. The information in it may not be copied, shared, or given to any third party without written permission from Cal-Fasteners Inc.

TITLE	DESCRIPTION
Hex Nut	Jam Thin Nut, Coarse Steel Class 04 DIN 439

Sheet Size	PART NUMBER	Rev.	ISSUED
A	526058	01	2026-10-20

SCALE: 2.016	Unless otherwise specified Dimensions are in MILLIMETERS