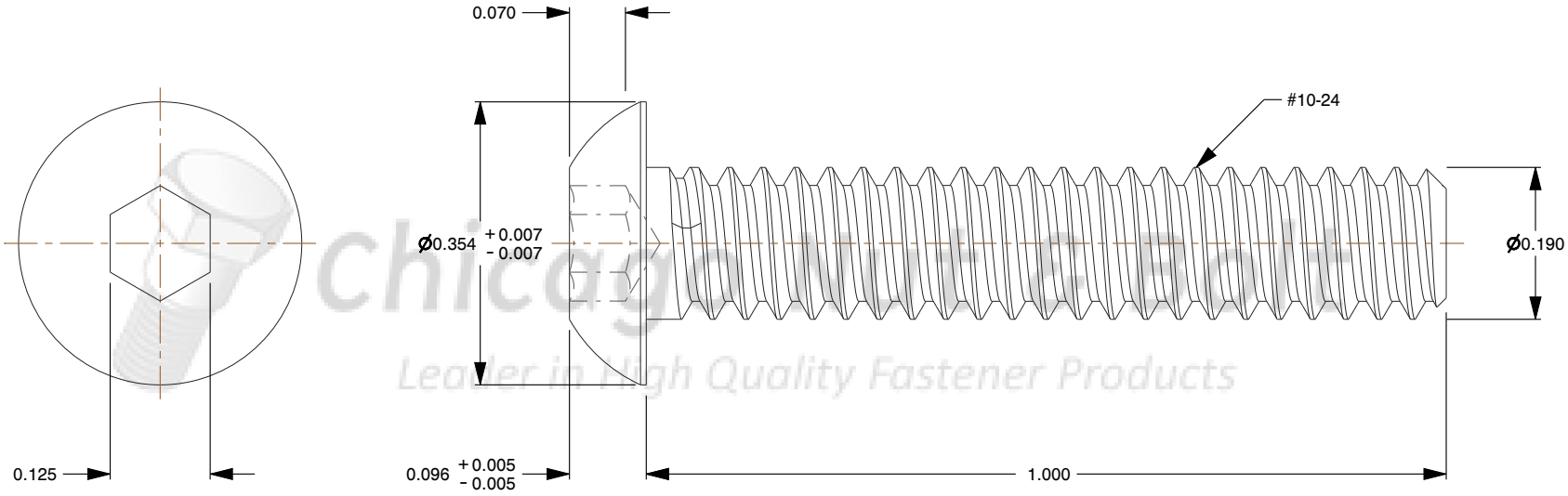

Chicago Nut & Bolt
Leader in High Quality Fastener Products

Notes:

1. **Category:** Socket Head Cap Screws
2. **System of Measurement:** Inch
3. **Head Style:** Button Head
4. **Drive Style:** Hex Socket Drive
5. **Thread Length:** Full Thread
6. **Thread Direction:** Right-Hand Thread
7. **Material:** Stainless Steel
8. **Material Grade:** 18-8 Stainless Steel
9. **Coating:** Plain

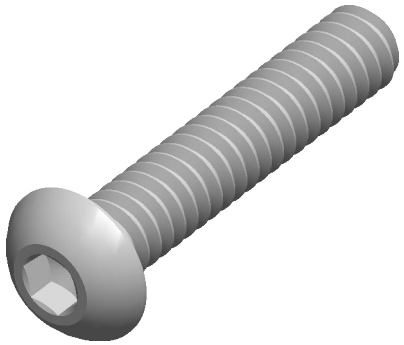

Chicago Nut & Bolt
Leader in High Quality Fastener Products
cnb-inc.com

THIRD ANGLE PROJECTION

This file and the related information are provided for reference only and may change without notice. Chicago Nut & Bolt does not guarantee the accuracy, completeness, or suitability of this file or the information provided. You are responsible for how you use this file and its information.

This document is the property of Chicago Nut & Bolt. The information in it may not be copied, shared, or given to any third party without written permission from Chicago Nut & Bolt.

DESCRIPTION
#10-24 x 1" Button Head Socket,
18-8 Stainless Steel

TITLE
Cap Screws

Sheet Size	PART NUMBER	Rev.	ISSUED
A	CNBH10241SS	01	2026-10-20

SCALE: 4.483 | Unless otherwise specified Dimensions are in INCHES