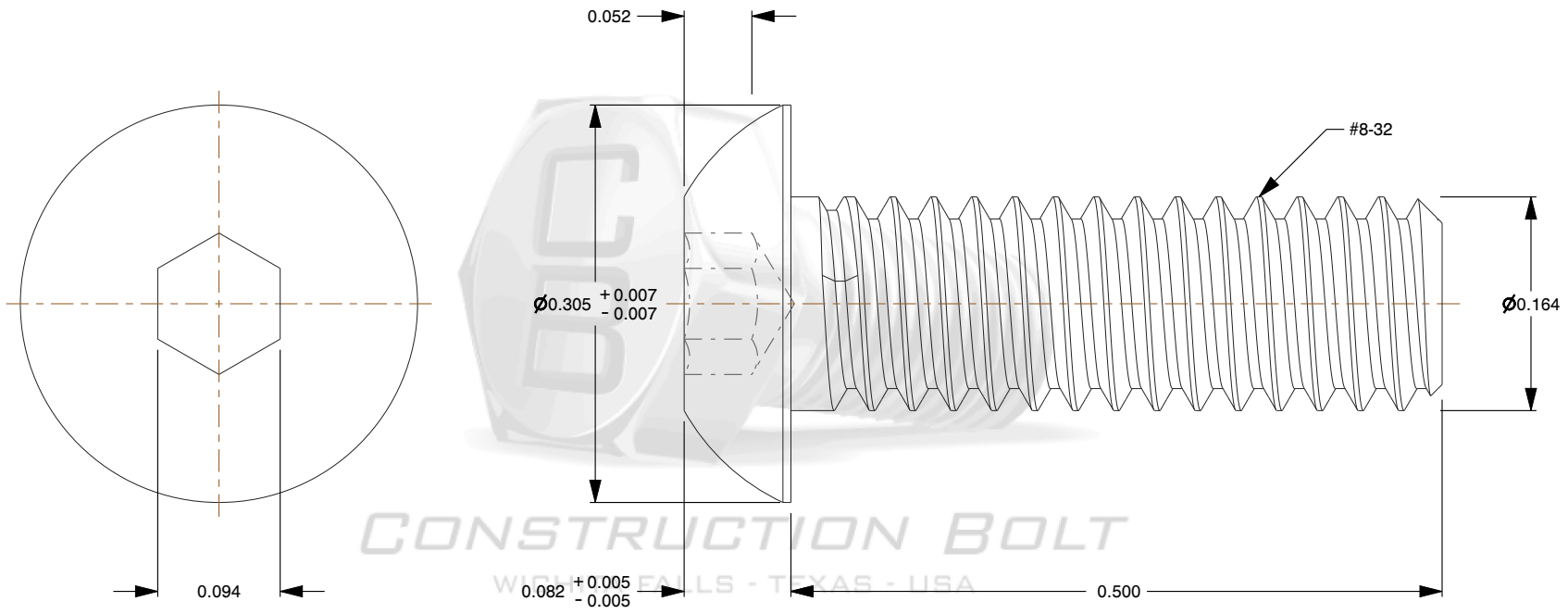

CONSTRUCTION BOLT
WICHITA FALLS - TEXAS - USA

Notes:

1. **Category:** Socket Head Cap Screws
2. **System of Measurement:** Inch
3. **Head Style:** Button Head
4. **Drive Style:** Hex Socket Drive
5. **Thread Length:** Full Thread
6. **Thread Direction:** Right-Hand Thread
7. **Material:** ASTM A576
8. **Material Grade:** Alloy Steel

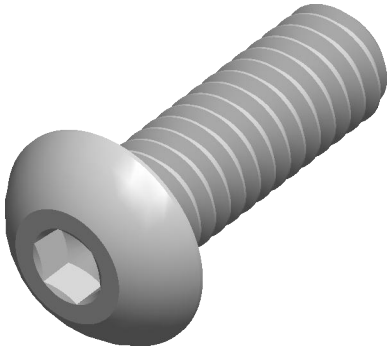

CONSTRUCTION BOLT
WICHITA FALLS - TEXAS - USA
constructionbolt.com

THIRD ANGLE PROJECTION

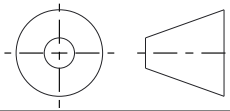

This file and the related information are provided for reference only and may change without notice. Construction Bolt does not guarantee the accuracy, completeness, or suitability of this file or the information provided. You are responsible for how you use this file and its information.

This document is the property of Construction Bolt. The information in it may not be copied, shared, or given to any third party without written permission from Construction Bolt.

DESCRIPTION

Button Head Socket Cap Screw #8-32 X 1/2

TITLE

Cap Screws

Sheet Size	PART NUMBER	Rev.	ISSUED
A	BCS063	01	2026-10-20

SCALE: 7.328

Unless otherwise specified Dimensions are in INCHES