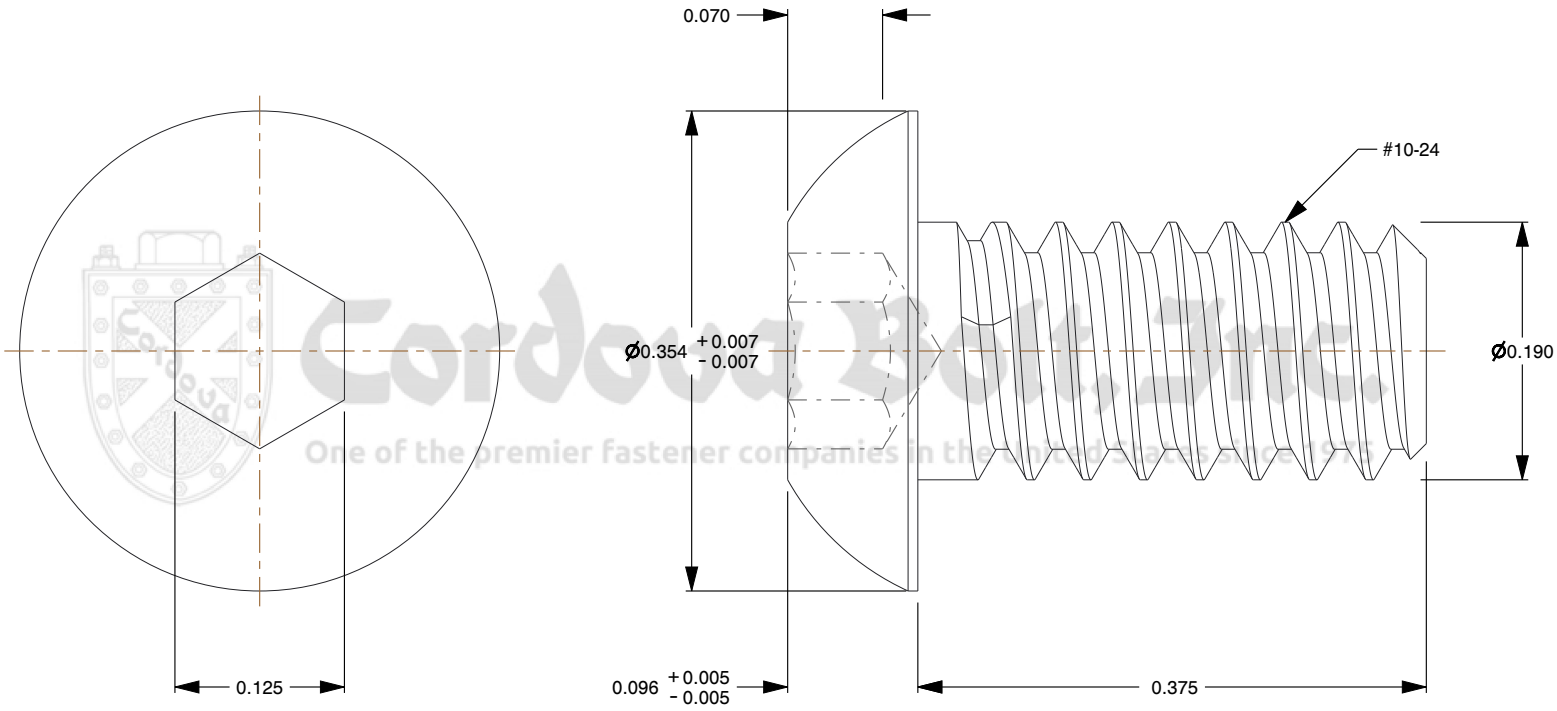

Cordova Bolt, Inc.
One of the premier fastener companies in the United States since 1975

Notes:

1. **Category:** Socket Head Cap Screws
2. **System of Measurement:** Inch
3. **Head Style:** Button Head
4. **Drive Style:** Hex Socket Drive
5. **Thread Length:** Full Thread
6. **Thread Direction:** Right-Hand Thread
7. **Material:** Stainless Steel
8. **Material Grade:** 18-8 Stainless Steel
9. **Coating:** Plain

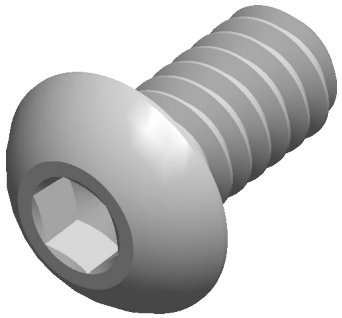

Cordova Bolt, Inc.
One of the premier fastener companies in the United States since 1975
www.cordovabolt.com

THIRD ANGLE PROJECTION

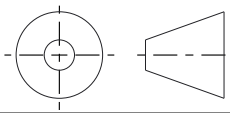

This file and the related information are provided for reference only and may change without notice. Cordova Bolt Inc does not guarantee the accuracy, completeness, or suitability of this file or the information provided. You are responsible for how you use this file and its information.

This document is the property of Cordova Bolt Inc. The information in it may not be copied, shared, or given to any third party without written permission from Cordova Bolt Inc.

DESCRIPTION
#10-24 x 3/8" Button Head Socket,
18-8 Stainless Steel

TITLE
Cap Screws

Sheet Size	PART NUMBER	Rev.	ISSUED
A	BH188SS1038	01	2026-10-20

SCALE: 7.062 | Unless otherwise specified Dimensions are in INCHES