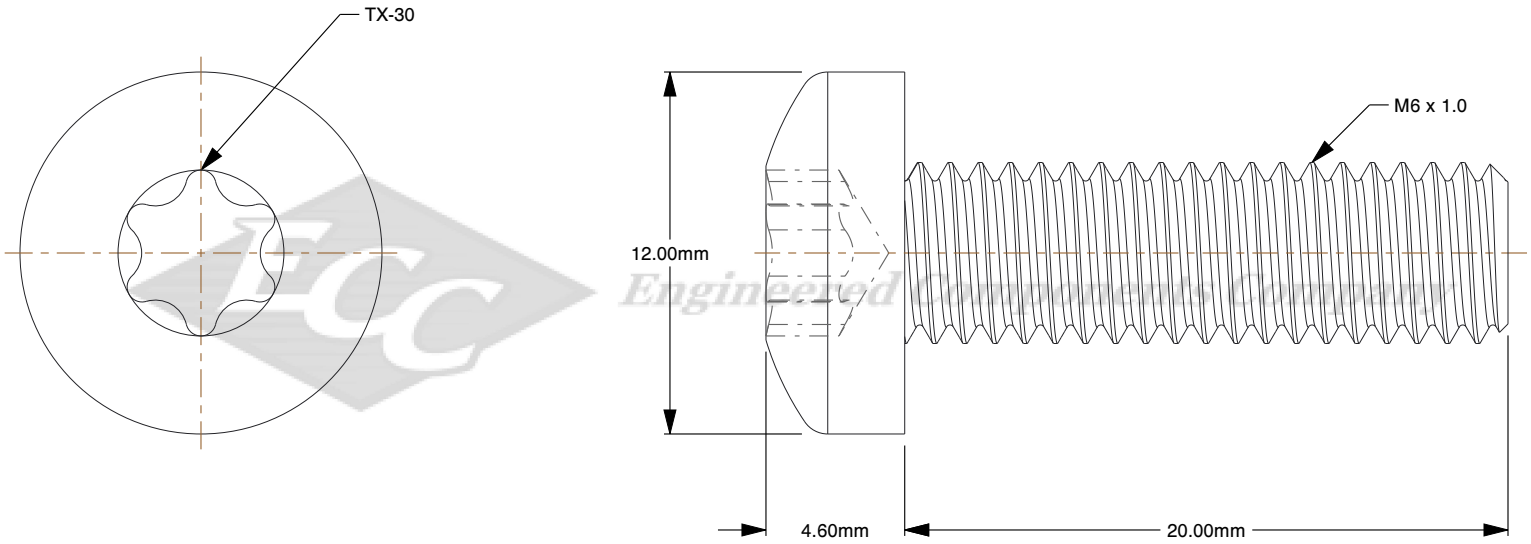

Engineered Components Company

Notes:

1. **Thread Diameter + Pitch:** M6X1.0
2. **Length:** 20mm
3. **Thread Amount:** Full Thread
4. **Threaded Length:** 20mm
5. **Material:** Steel
6. **Finish:** Zinc Plated
7. **Drive:** T30 Torx Socket
8. **Type Screw/Bolt:** Pan Head Machine
9. **Thread Direction:** Right Hand
10. **Measurement System:** Metric

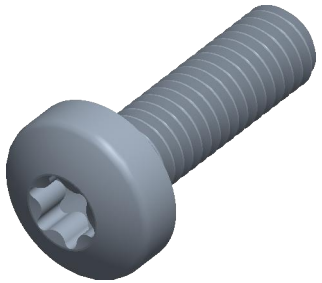

Engineered Components Company

www.engcomponents.com

THIRD ANGLE PROJECTION

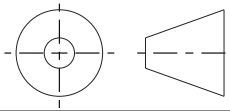

This file and the related information are provided for reference only and may change without notice. Engineered Components Company does not guarantee the accuracy, completeness, or suitability of this file or the information provided. You are responsible for how you use this file and its information.

This document is the property of Engineered Components Company. The information in it may not be copied, shared, or given to any third party without written permission from Engineered Components Company.

DESCRIPTION

M6-1.0 x 20mm TORX PLUS® Pan Head

TITLE

Pan Head Screws

Sheet Size	PART NUMBER	Rev.	ISSUED
A	F8910-0158P	01	2026-10-20

SCALE: 3.990

Unless otherwise specified Dimensions are in MILLIMETERS