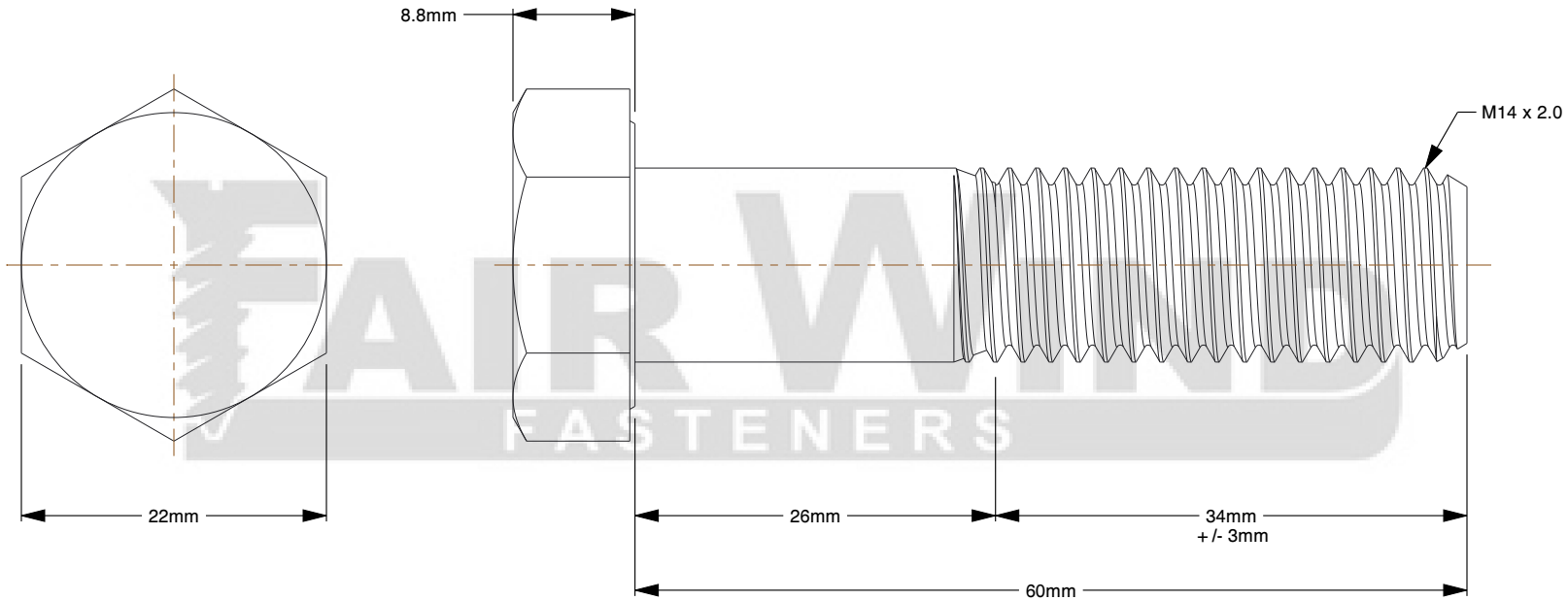

Notes:

1. **Diameter:** M14
2. **Diameter-Thread Size:** M14-2.00
3. **Finish:** Plain
4. **Grade:** 316 / A4
5. **Head Style:** Hex
6. **Length:** 60 mm
7. **Material:** Stainless Steel
8. **Measurement Type:** Metric
9. **Product Type:** Hex Cap Screws
10. **Specifications:** DIN 933
11. **Thread:** Coarse
12. **Thread Style:** Partially Threaded

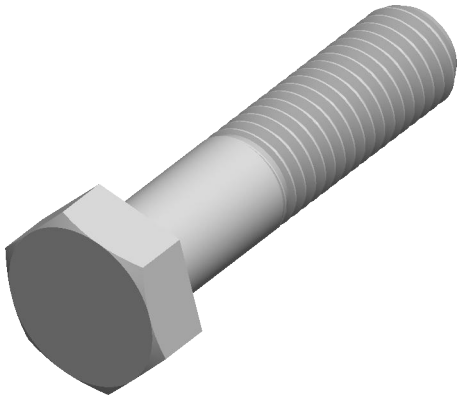

FAIR WIND FASTENERS

fairwindfasteners.com

THIRD ANGLE PROJECTION

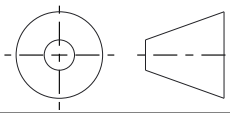

This file and the related information are provided for reference only and may change without notice. Fair Wind Fasteners does not guarantee the accuracy, completeness, or suitability of this file or the information provided. You are responsible for how you use this file and its information.

This document is the property of Fair Wind Fasteners. The information in it may not be copied, shared, or given to any third party without written permission from Fair Wind Fasteners.

DESCRIPTION

M14-2.00 x 60 mm Partially Threaded
316/A4 Stainless Metric Hex Cap Screws / Bolts

TITLE

Hex Bolts

Sheet Size	PART NUMBER	Rev.	ISSUED
A	SS-14-30	01	2026-10-20

SCALE: 1.888

Unless otherwise specified Dimensions are in MILLIMETERS