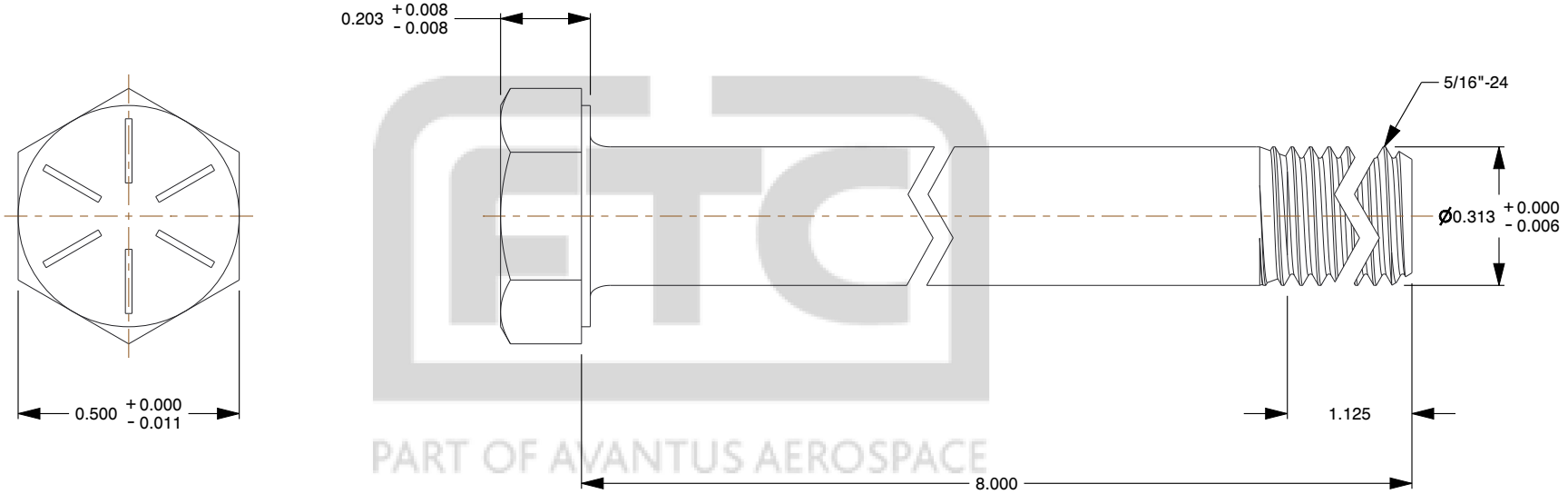

PART OF AVANTUS AEROSPACE

Notes:

1. **Head Style:** Hex Head
2. **Head Style Detail:** Washer Face
3. **Drive Style:** External Hex Drive
4. **Pitch:** UNF Fine Thread
5. **Thread Direction:** Right-Hand Thread
6. **Point:** Chamfered Point
7. **System of Measurement:** Inch
8. **Standards and Specifications:** ASME B18.2.1

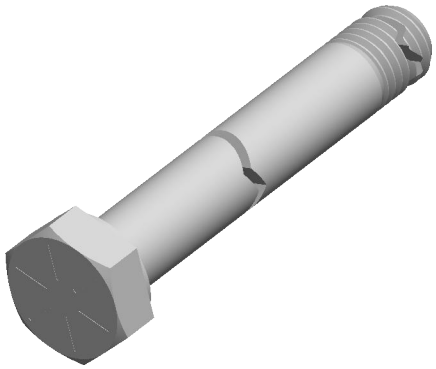

FTC
PART OF AVANTUS AEROSPACE
ftc-usa.com

THIRD ANGLE PROJECTION

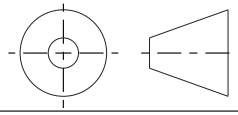

This file and the related information are provided for reference only and may change without notice. Fastener Technology Corp does not guarantee the accuracy, completeness, or suitability of this file or the information provided. You are responsible for how you use this file and its information.

This document is the property of Fastener Technology Corp. The information in it may not be copied, shared, or given to any third party without written permission from Fastener Technology Corp.

DESCRIPTION

5/16"-24 X 8" Hex Head Cap Screws Bolts, UNF Fine Thread, Titanium Grade 5

TITLE

Hex Cap Screw

Sheet Size	PART NUMBER	Rev.	ISSUED
A	FTC516HS	01	2026-10-20

SCALE: 2.538

Unless otherwise specified Dimensions are in INCHES