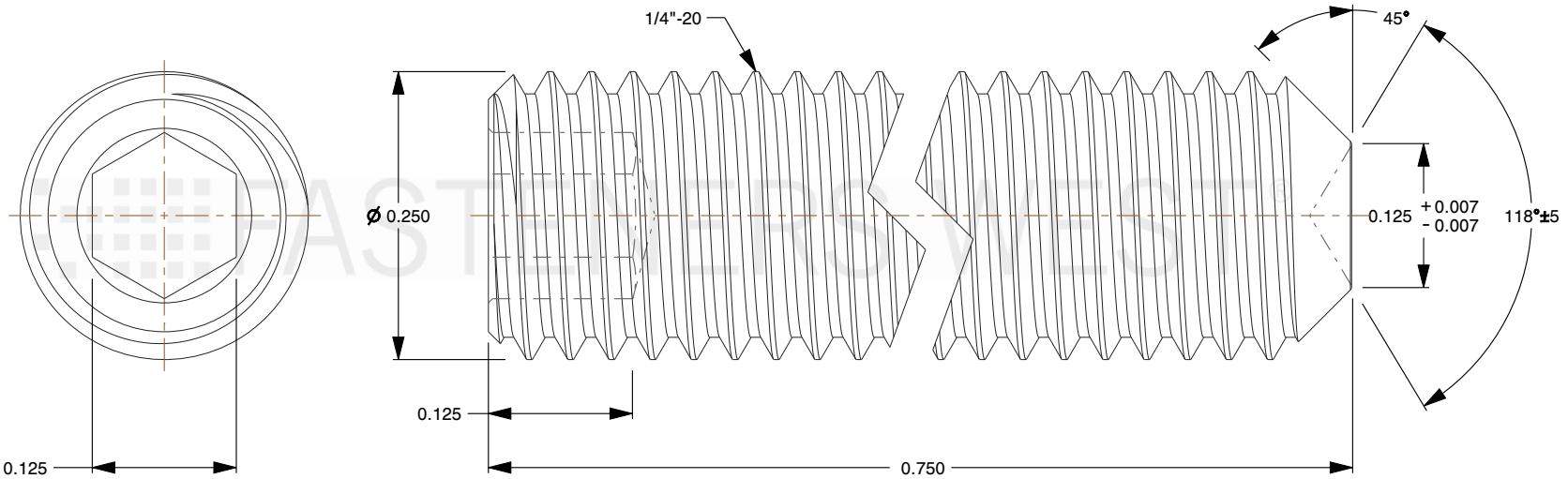

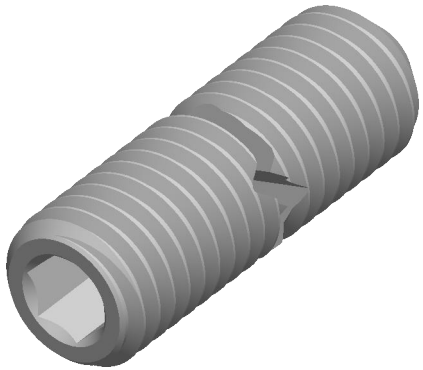

Notes:

1. **Category:** Set Screws
2. **System of Measurement:** Inch
3. **Head Style:** Headless
4. **Drive Style:** Hex Socket Drive
5. **Pitch:** UNRC Coarse Thread
6. **Thread Length:** Full Thread
7. **Thread Direction:** Right-Hand Thread
8. **Point:** Cup Point
9. **Material:** Stainless Steel
10. **Material Grade:** 18-8 Stainless Steel

FASTENERS WEST®

fastenerswestinc.com

THIRD ANGLE PROJECTION

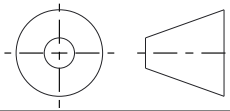

This file and the related information are provided for reference only and may change without notice. Fasteners West does not guarantee the accuracy, completeness, or suitability of this file or the information provided. You are responsible for how you use this file and its information.

This document is the property of Fasteners West. The information in it may not be copied, shared, or given to any third party without written permission from Fasteners West.

DESCRIPTION

1/4-20 x 3/4 Hex socket set screw CUP 18-8

TITLE

Set Screw

Sheet Size	PART NUMBER	Rev.	ISSUED
A	14C12SS8	01	2026-10-20

SCALE: 6.400

Unless otherwise specified Dimensions are in INCHES