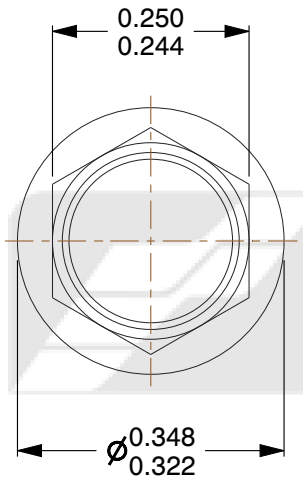

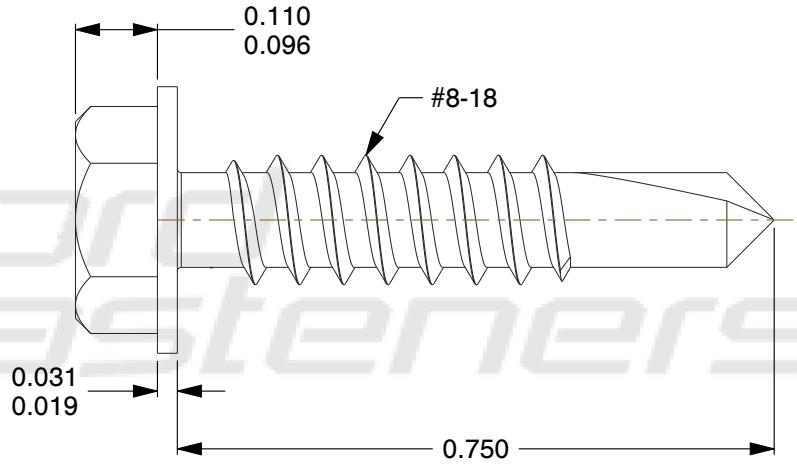

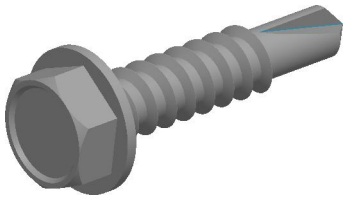

Notes:

1. **Diameter:** #8
2. **Thread Form:** #8-18
3. **Head Style:** Hex Washer Head
4. **Drill Point:** #2
5. **Material:** 412 Stainless Steel

Ford Fasteners fordfasteners.com		THIRD ANGLE PROJECTION	
This file and the related information are provided for reference only and may change without notice. Ford Fasteners Inc does not guarantee the accuracy, completeness, or suitability of this file or the information provided. You are responsible for how you use this file and its information.		This document is the property of Ford Fasteners Inc. The information in it may not be copied, shared, or given to any third party without written permission from Ford Fasteners Inc.	
DESCRIPTION Indented Hex Washer Tapping Screws Type A		TITLE	
Sheet Size	PART NUMBER	Rev.	ISSUED
A	8N75SDS4-W	01	2026-10-20
SCALE: 4.145	Unless otherwise specified Dimensions are in INCHES		

Ford Fasteners