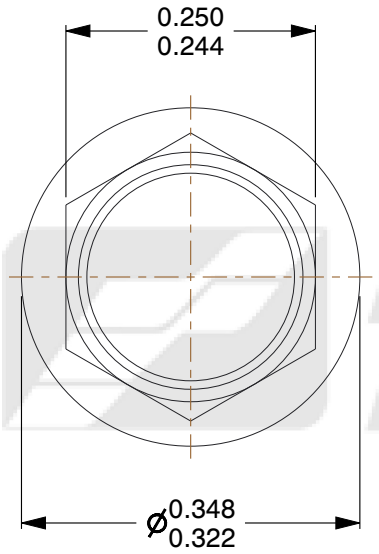

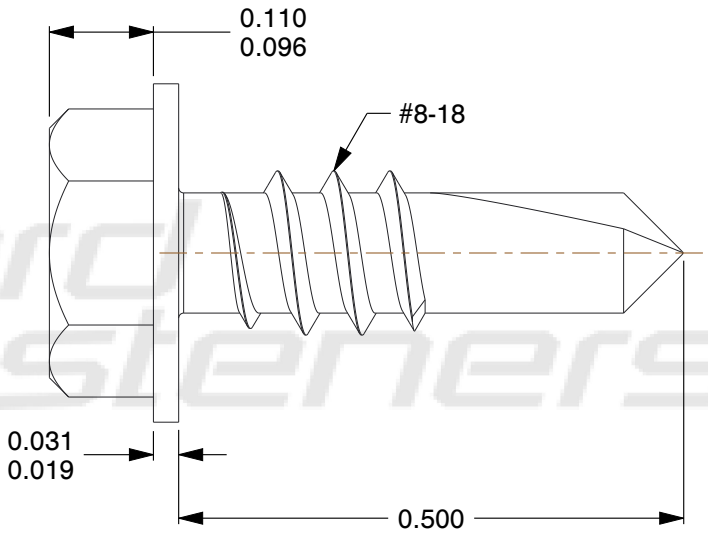

Ford Fasteners

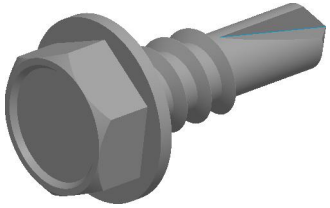

Notes:

1. **Diameter:** #8
2. **Thread Form:** #8-18
3. **Head Style:** Hex Washer Head
4. **Drill Point:** #2
5. **Material:** 410 Stainless Steel

Ford Fasteners fordfasteners.com	THIRD ANGLE PROJECTION
This file and the related information are provided for reference only and may change without notice. Ford Fasteners Inc does not guarantee the accuracy, completeness, or suitability of this file or the information provided. You are responsible for how you use this file and its information.	This document is the property of Ford Fasteners Inc. The information in it may not be copied, shared, or given to any third party without written permission from Ford Fasteners Inc.
DESCRIPTION Indented Hex Washer Tapping Screws Type A	TITLE

Sheet Size	PART NUMBER	Rev.	ISSUED
A	8N50SDS4-W	01	2026-10-20

SCALE: 5.261	Unless otherwise specified Dimensions are in INCHES