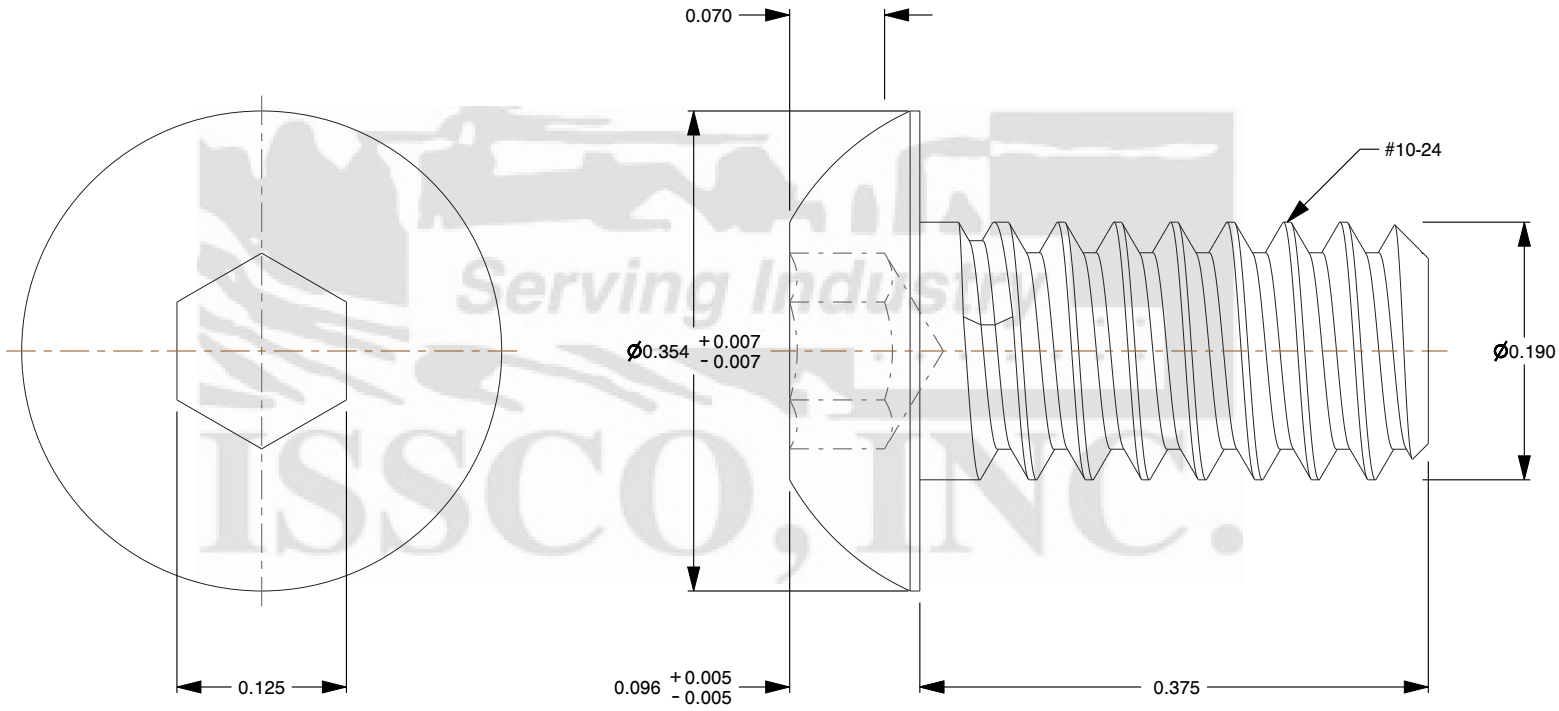

Notes:

1. **Category:** Socket Head Cap Screws
2. **System of Measurement:** Inch
3. **Head Style:** Button Head
4. **Drive Style:** Hex Socket Drive
5. **Thread Length:** Full Thread
6. **Thread Direction:** Right-Hand Thread
7. **Material:** Stainless Steel
8. **Material Grade:** 18-8 Stainless Steel
9. **Coating:** Plain

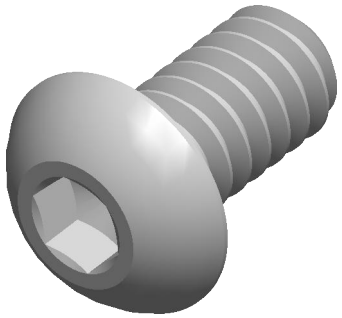

ISSCO, INC.
www.isscoinc.com

THIRD ANGLE PROJECTION

This file and the related information are provided for reference only and may change without notice. ISSCO Inc does not guarantee the accuracy, completeness, or suitability of this file or the information provided. You are responsible for how you use this file and its information.

This document is the property of ISSCO Inc. The information in it may not be copied, shared, or given to any third party without written permission from ISSCO Inc.

DESCRIPTION
#10-24 x 3/8" Button Head Socket,
18-8 Stainless Steel

TITLE
Cap Screws

Sheet Size	PART NUMBER	Rev.	ISSUED
A	IB102438SS	01	2026-10-20

SCALE: 7.062 | Unless otherwise specified Dimensions are in INCHES