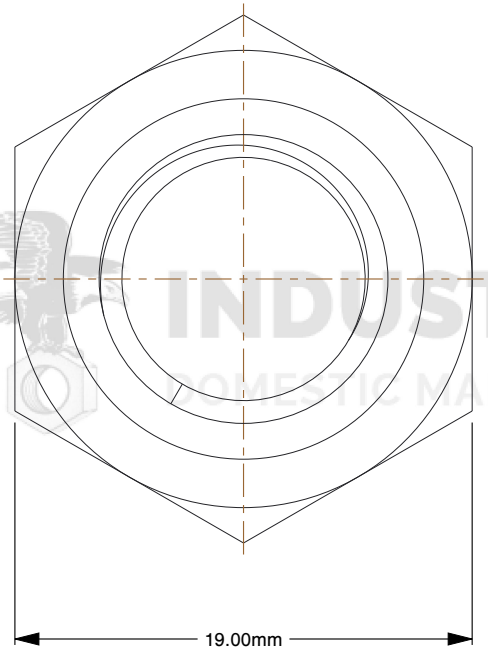

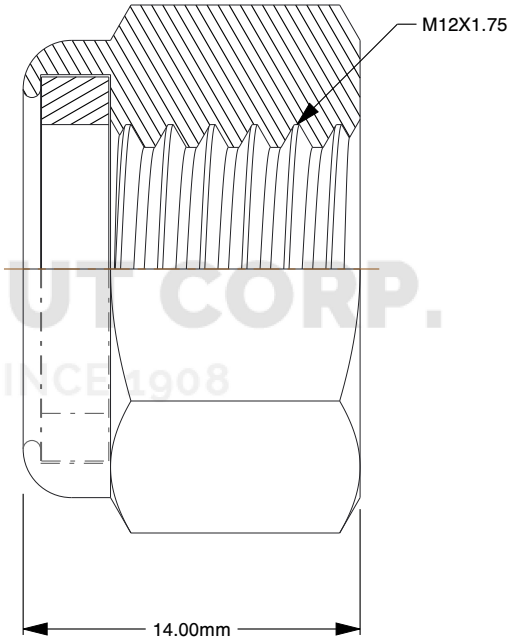

INDUSTRIAL NUT CORP.
DOMESTIC MANUFACTURER SINCE 1908

Notes:

1. **Thread Diameter + Pitch:** M12X1.75
2. **Thread Direction:** Right Hand
3. **Type:** NU SERIES
4. **Material:** A2-70 Stainless Steel
5. **Finish:** Plain
6. **Drive:** 19mm Wrench
7. **Height:** 14mm
8. **Profile:** High
9. **Measurement System:** Metric

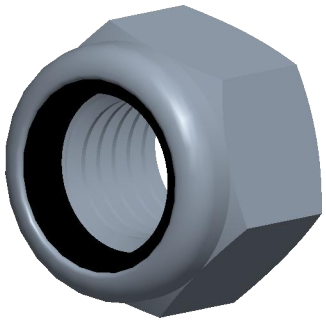

INDUSTRIAL NUT CORP.
DOMESTIC MANUFACTURER SINCE 1908
industrialnut.com

THIRD ANGLE PROJECTION

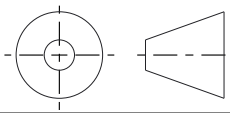

This file and the related information are provided for reference only and may change without notice. Industrial Nut Corp does not guarantee the accuracy, completeness, or suitability of this file or the information provided. You are responsible for how you use this file and its information.

This document is the property of Industrial Nut Corp. The information in it may not be copied, shared, or given to any third party without written permission from Industrial Nut Corp.

DESCRIPTION

NU Series Heavy Hexagon
Stainless Steel
Passivated

TITLE

Nylon Locking Nut

Sheet Size	PART NUMBER	Rev.	ISSUED
A	12175HIGHSS	01	2026-10-20

SCALE: 3.184

Unless otherwise specified Dimensions are in MILLIMETERS