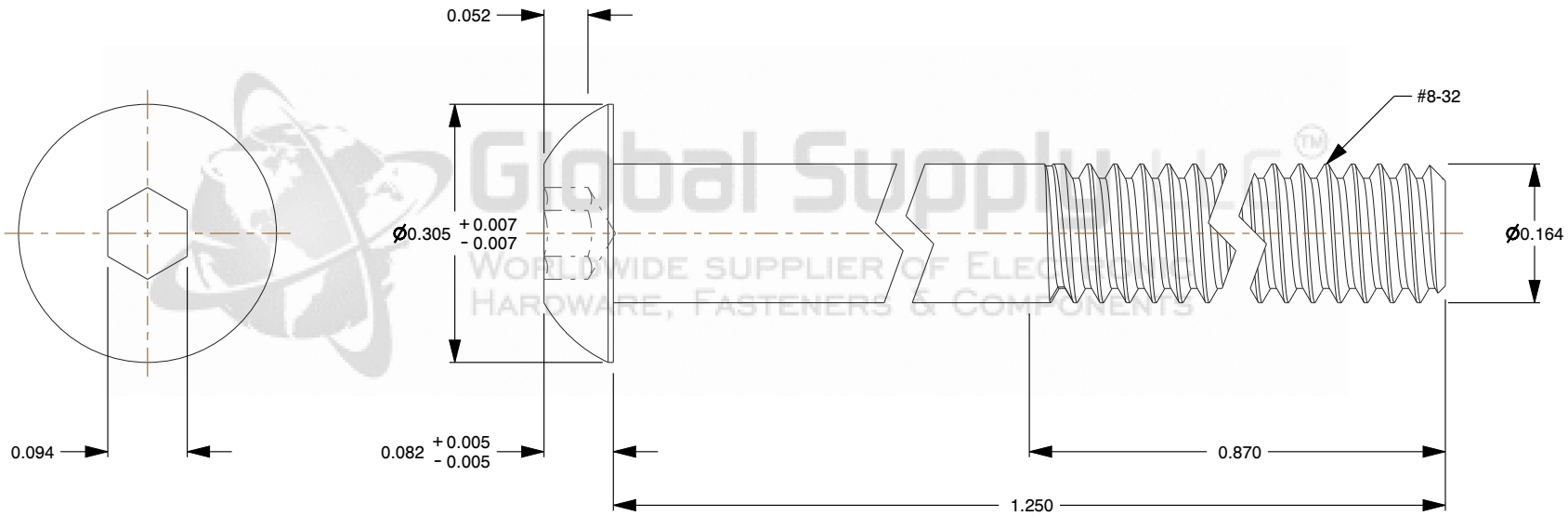

Global Supply LLC
Worldwide supplier of Electronic Hardware, Fasteners & Components

Notes:

1. **Category:** Socket Head Cap Screws
2. **System of Measurement:** Inch
3. **Thread Size:** #8-32
4. **Length:** 1.25
5. **Head Style:** Button Head
6. **Drive Style:** Hex Socket Drive
7. **Thread Length:** Full Thread
8. **Thread Direction:** Right-Hand Thread
9. **Material:** Stainless Steel
10. **Material Grade:** 18-8 Stainless Steel
11. **Coating:** Uncoated

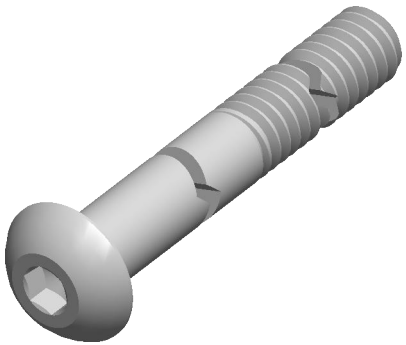

Global Supply LLC
Worldwide supplier of Electronic Hardware, Fasteners & Components
www.globalsupply.com

THIRD ANGLE PROJECTION

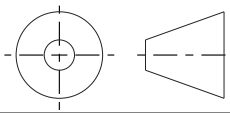

This file and the related information are provided for reference only and may change without notice. Innovative Plastics does not guarantee the accuracy, completeness, or suitability of this file or the information provided. You are responsible for how you use this file and its information.

This document is the property of Innovative Plastics. The information in it may not be copied, shared, or given to any third party without written permission from Innovative Plastics.

DESCRIPTION

8-32 X 1 1/4 BUTTON SOC CAP SCREW 18-8

TITLE

Cap Screws

Sheet Size	PART NUMBER	Rev.	ISSUED
A	8C80SBCSP	01	2026-10-20

SCALE: 4.741

Unless otherwise specified Dimensions are in INCHES