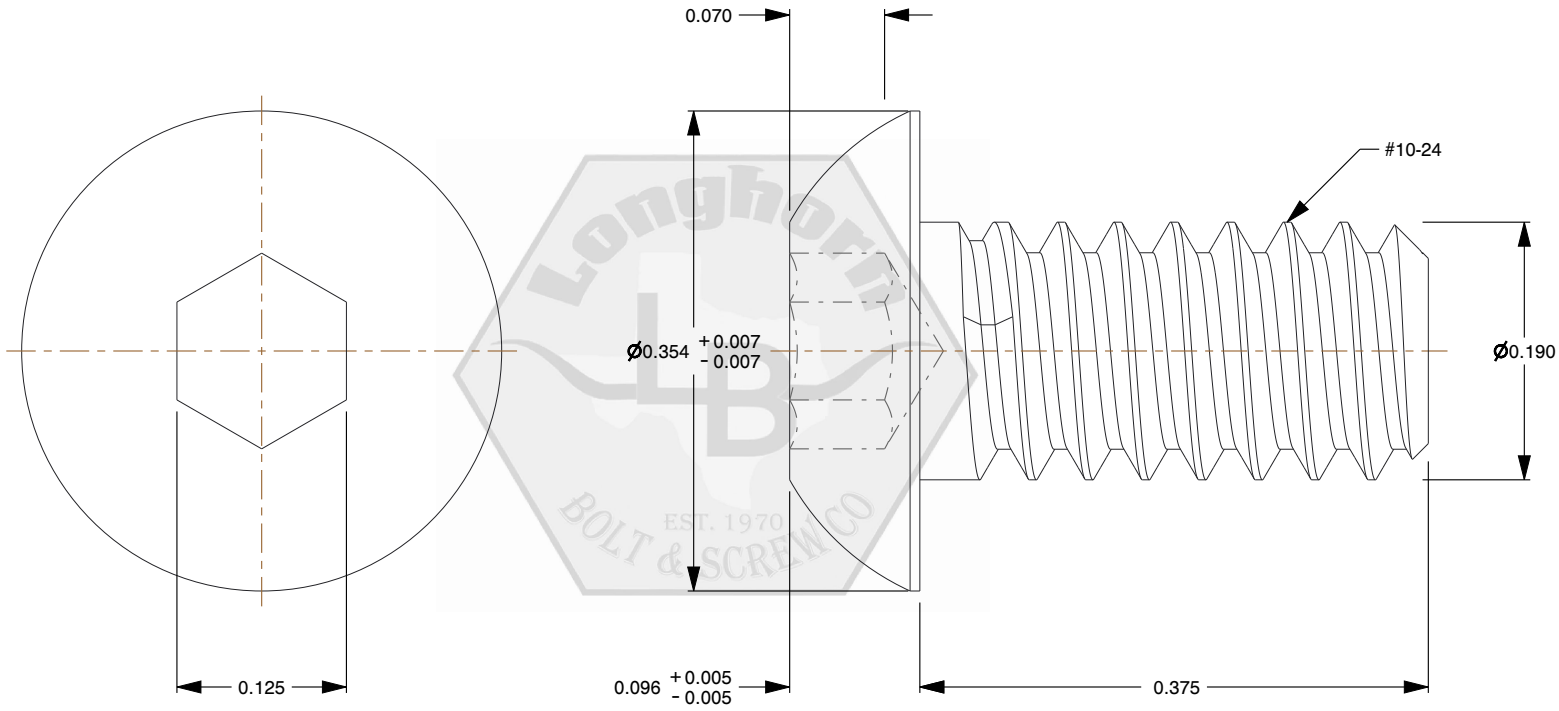

Notes:

1. **Category:** Socket Head Cap Screws
2. **System of Measurement:** Inch
3. **Head Style:** Button Head
4. **Drive Style:** Hex Socket Drive
5. **Thread Length:** Full Thread
6. **Thread Direction:** Right-Hand Thread
7. **Material:** Stainless Steel
8. **Material Grade:** 18-8 Stainless Steel
9. **Coating:** Plain

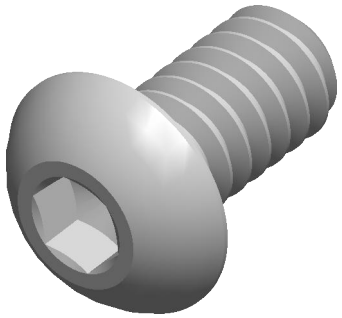

www.longhornbolt.com

THIRD ANGLE PROJECTION

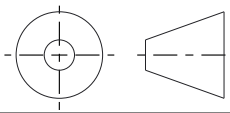

This file and the related information are provided for reference only and may change without notice. Longhorn Bolt & Screw does not guarantee the accuracy, completeness, or suitability of this file or the information provided. You are responsible for how you use this file and its information.

This document is the property of Longhorn Bolt & Screw. The information in it may not be copied, shared, or given to any third party without written permission from Longhorn Bolt & Screw.

DESCRIPTION

#10-24 x 3/8" Button Head Socket,
18-8 Stainless Steel

TITLE

Cap Screws

Sheet Size	PART NUMBER	Rev.	ISSUED
A	LBSH102438SS	01	2026-10-20

SCALE: 7.062

Unless otherwise specified Dimensions are in INCHES