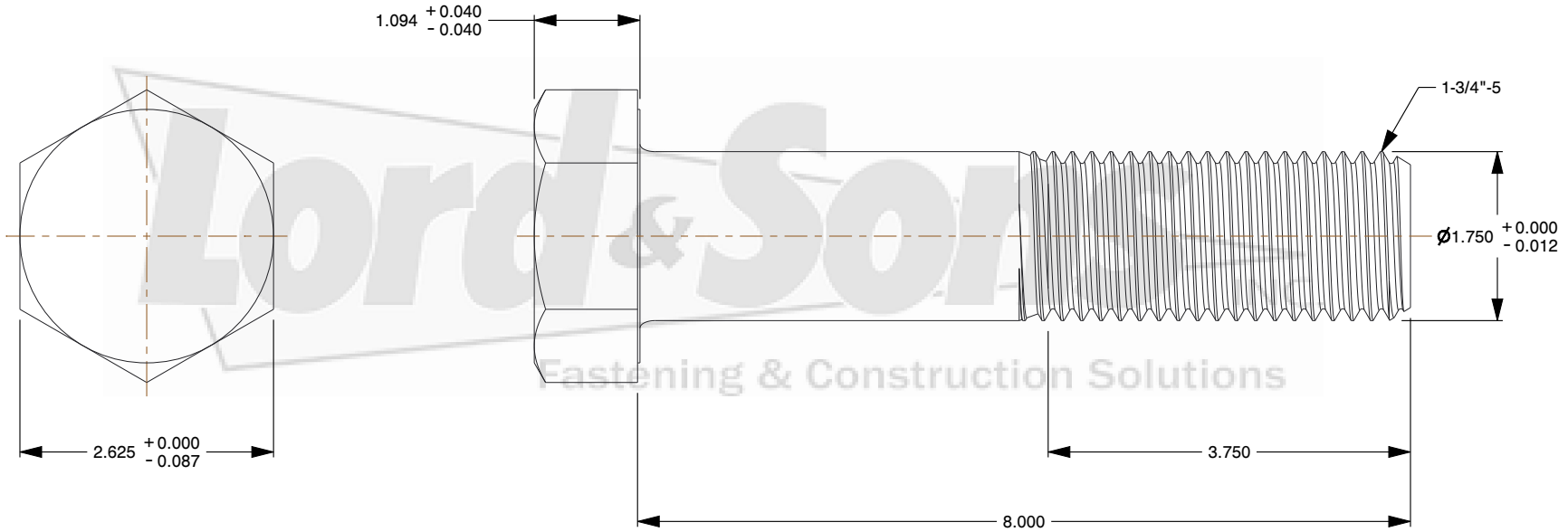


Lord & Sons
Fastening & Construction Solutions

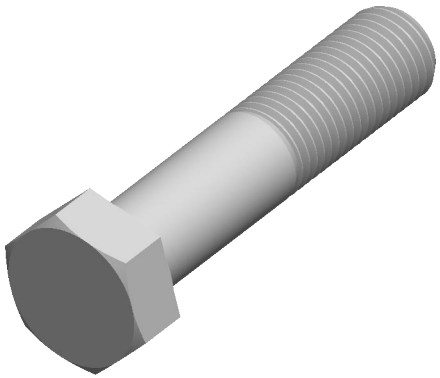

Notes:

1. **Diameter & Thread:** 1 3/4"-5
2. **Length:** 8"
3. **Finish:** Zinc Plated

Lord & Sons INC.
Fastening & Construction Solutions
www.lordandsons.com

THIRD ANGLE PROJECTION

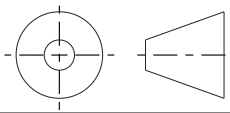

This file and the related information are provided for reference only and may change without notice. Lord & Sons Inc does not guarantee the accuracy, completeness, or suitability of this file or the information provided. You are responsible for how you use this file and its information.

This document is the property of Lord & Sons Inc. The information in it may not be copied, shared, or given to any third party without written permission from Lord & Sons Inc.

DESCRIPTION
HEX BOLT A307B 1 3/4 X 8 ZP

TITLE
Hex Bolts

| Sheet Size | PART NUMBER | Rev. | ISSUED |
|---|---|---|---|
| A | 22117560800 | 01 | 2026-10-23 |

SCALE: 0.556 | Unless otherwise specified Dimensions are in INCHES