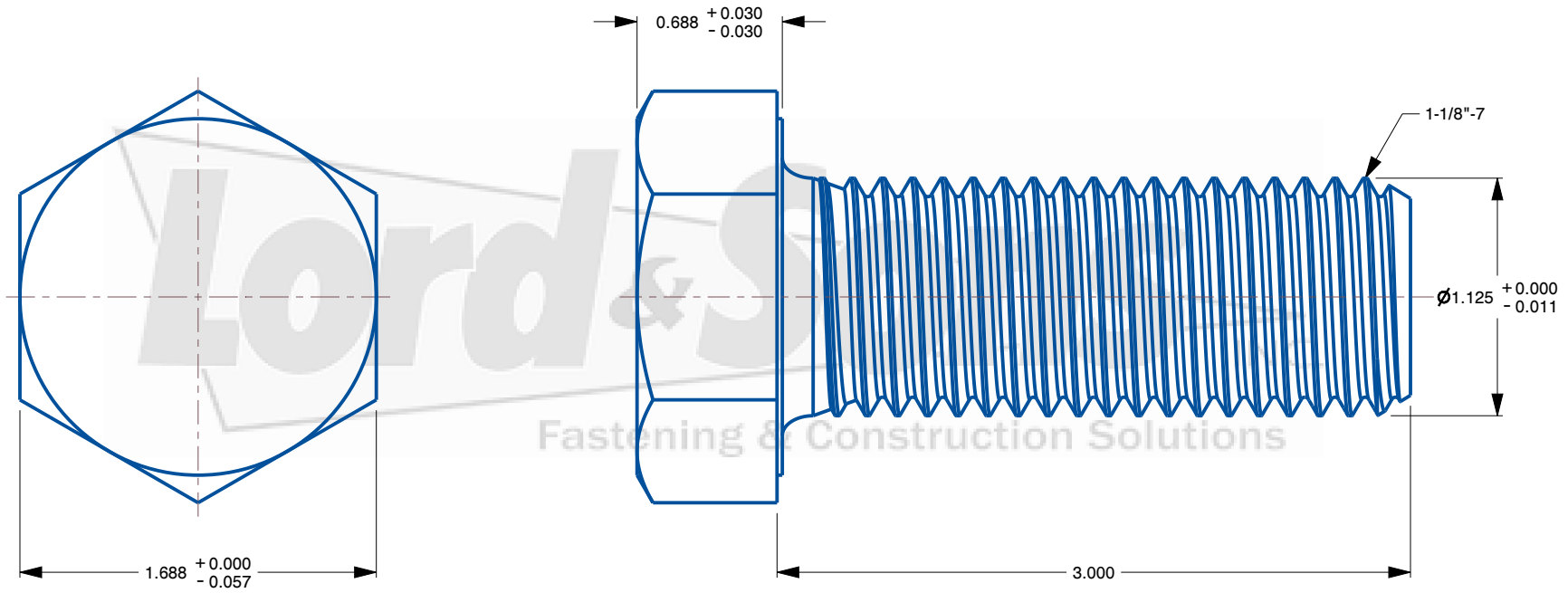

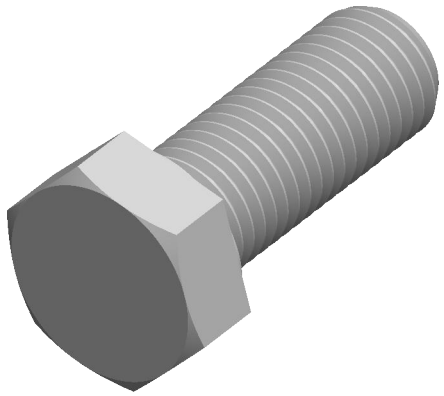

Notes:

1. **Diameter & Thread:** 1 1/8"-7
2. **Length:** 3"
3. **Finish:** Plain

Lord & Sons INC.
Fastening & Construction Solutions
www.lordandsons.com

THIRD ANGLE PROJECTION

This file and the related information are provided for reference only and may change without notice. Lord & Sons Inc does not guarantee the accuracy, completeness, or suitability of this file or the information provided. You are responsible for how you use this file and its information.

This document is the property of Lord & Sons Inc. The information in it may not be copied, shared, or given to any third party without written permission from Lord & Sons Inc.

DESCRIPTION
HEX BOLT A307B 1-1/8 X 3 PLAIN

TITLE
Hex Bolts

Sheet Size	PART NUMBER	Rev.	ISSUED
A	22011260300	01	2026-10-21

SCALE: 1.215 | Unless otherwise specified Dimensions are in INCHES