**DESCRIPTION**
3/8-24 T-Groove Nuts

**MATERIAL**
316 Stainless Steel

LOSS PREVENTION
FASTENERS & TOOLS™
div of Ultra Fasteners Inc www.LPfast.com PH 1.888.584.6283

| DRAWN BY | CHECKED BY | PART NO. |
|---|---|---|
| PA | KB | 324TGNSS |

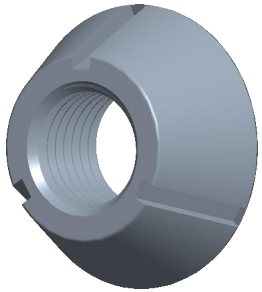

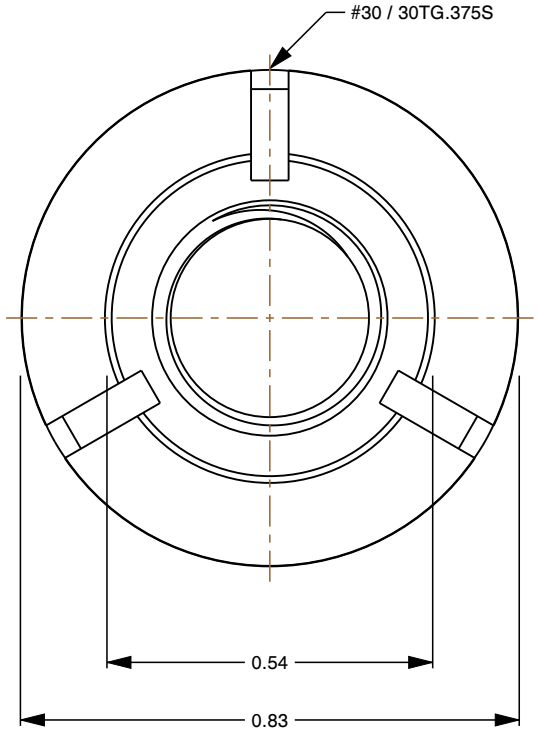


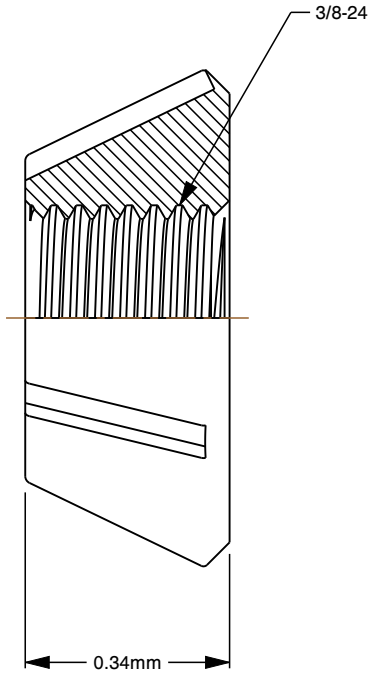


Notes:

1. **Thread Diameter + Pitch:** 3/8-24
2. **Thread Direction:** Right Hand
3. **Type:** T-Groove Nut
4. **Material:** 316 Stainless Steel
5. **Finish:** Plain
6. **Drive:** #30 / 30TG.375S
7. **Height:** 0.34
8. **Top Diameter:**0.542
9. **Bottom Diameter:**0.83
10. **Measurement System:** Inch

**CUSTOMER APPROVAL**

Signature below authorizes Loss Prevention Fasteners to use the specification and dimensions as stated on the drawing for manufacturing purposes.

**SIGNATURE**

**DATE**

**NOTICE**

THIS FASTNER IS A PART OF THR TOTAL DESIGN AND IT USE IN THE COMPLETED ASSEMBLY IS CONTROLLED BY THE USER.

LOSS PREVENTION FASTENER ASSUMES RESPONSIBITIES ONLY FOR MEETING SPECIFICATIONS SHOWN ON THIS DRAWING.

ALL DATA CONTAINED HERIN IS TO BE CONSIDERED CONFIDENTIAL.

NO DUPLICATION WITHOUT EXPRESS PERMISSION IS PERMITTED