DESCRIPTION
M6X1 T-Groove Nuts

MATERIAL
316 Stainless Steel

LOSS PREVENTION
FASTENERS & TOOLS™
div of Ultra Fasteners Inc www.LPfast.com PH 1.888.584.6283

DRAWN BY	CHECKED BY	PART NO.
PA	KB	M6-TGNSS

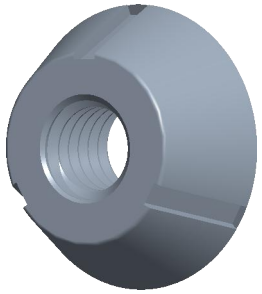

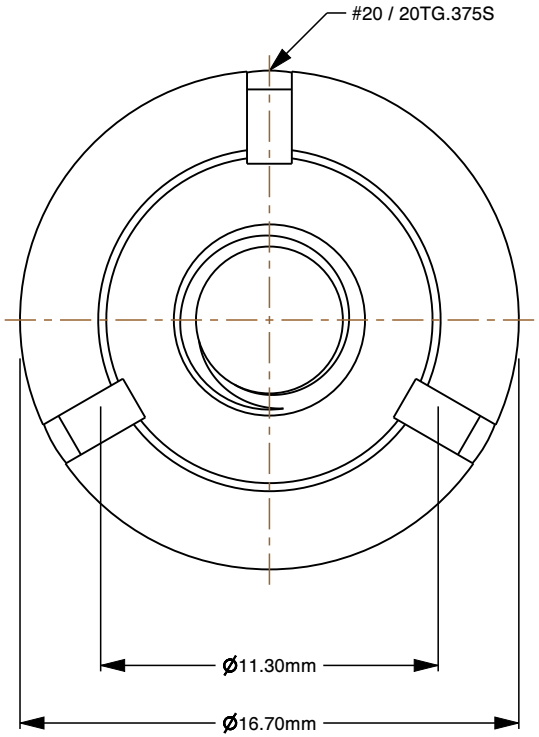

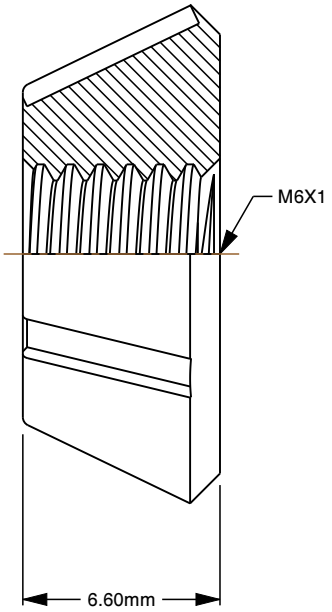

Notes:

1. **Thread Diameter + Pitch:** M6X1
2. **Thread Direction:** Right Hand
3. **Type:** T-Groove Nut
4. **Material:** 316 Stainless Steel
5. **Finish:** Plain
6. **Drive:** #20 / 20TG.375S
7. **Height:** 6.7mm
8. **Top Diameter:**11.3mm
9. **Bottom Diameter:**16.7mm
10. **Measurement System:** Metric

CUSTOMER APPROVAL

Signature below authorizes Loss Prevention Fasteners to use the specification and dimensions as stated on the drawing for manufacturing purposes.

SIGNATURE

DATE

NOTICE

THIS FASTNER IS A PART OF THR TOTAL DESIGN AND IT USE IN THE COMPLETED ASSEMBLY IS CONTROLLED BY THE USER.

LOSS PREVENTION FASTENER ASSUMES RESPONSIBITIES ONLY FOR MEETING SPECIFICATIONS SHOWN ON THIS DRAWING.

ALL DATA CONTAINED HERIN IS TO BE CONSIDERED CONFIDENTIAL.

NO DUPLICATION WITHOUT EXPRESS PERMISSION IS PERMITTED