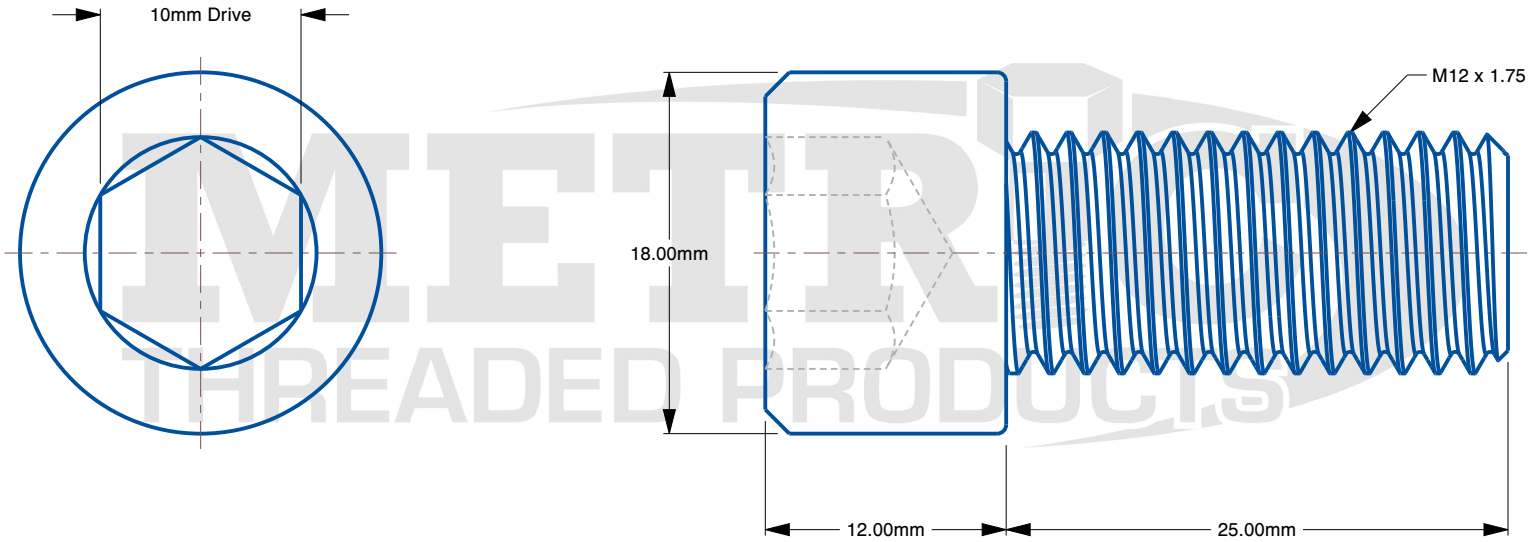

Notes:

1. **Specification:** DIN 912, ISO 4762
2. **Thread Diameter + Pitch:** M12X1.75
3. **Length:** 25mm
4. **Thread Amount:** Full Thread
5. **Threaded Length:** 25mm
6. **Unthreaded Length:** 0mm
7. **Material:** Class 8.8
8. **Finish:** Clear Zinc Cr3 Trivalent Passivated
9. **Head Height:** 12mm
10. **Drive:** 10mm Allen Socket
11. **Type Screw/Bolt:** Socket Head
12. **Thread Direction:** Right Hand
13. **Measurement System:** Metric

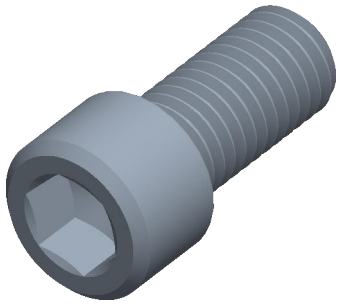

METRIC THREADED PRODUCTS

www.metric-threaded.com

THIRD ANGLE PROJECTION

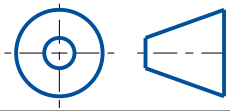

This file and the related information are provided for reference only and may change without notice. Metric Threaded Products does not guarantee the accuracy, completeness, or suitability of this file or the information provided. You are responsible for how you use this file and its information.

This document is the property of Metric Threaded Products. The information in it may not be copied, shared, or given to any third party without written permission from Metric Threaded Products.

DESCRIPTION

M12-1.75 x 25 Socket Head Cap Screw, Class 8.8 Zinc DIN 912 / ISO 4762

TITLE

Socket Head Bolts

Sheet Size	PART NUMBER	Rev.	ISSUED
A	9128112025	01	2026-10-22

SCALE: 2.655

Unless otherwise specified Dimensions are in MILLIMETERS