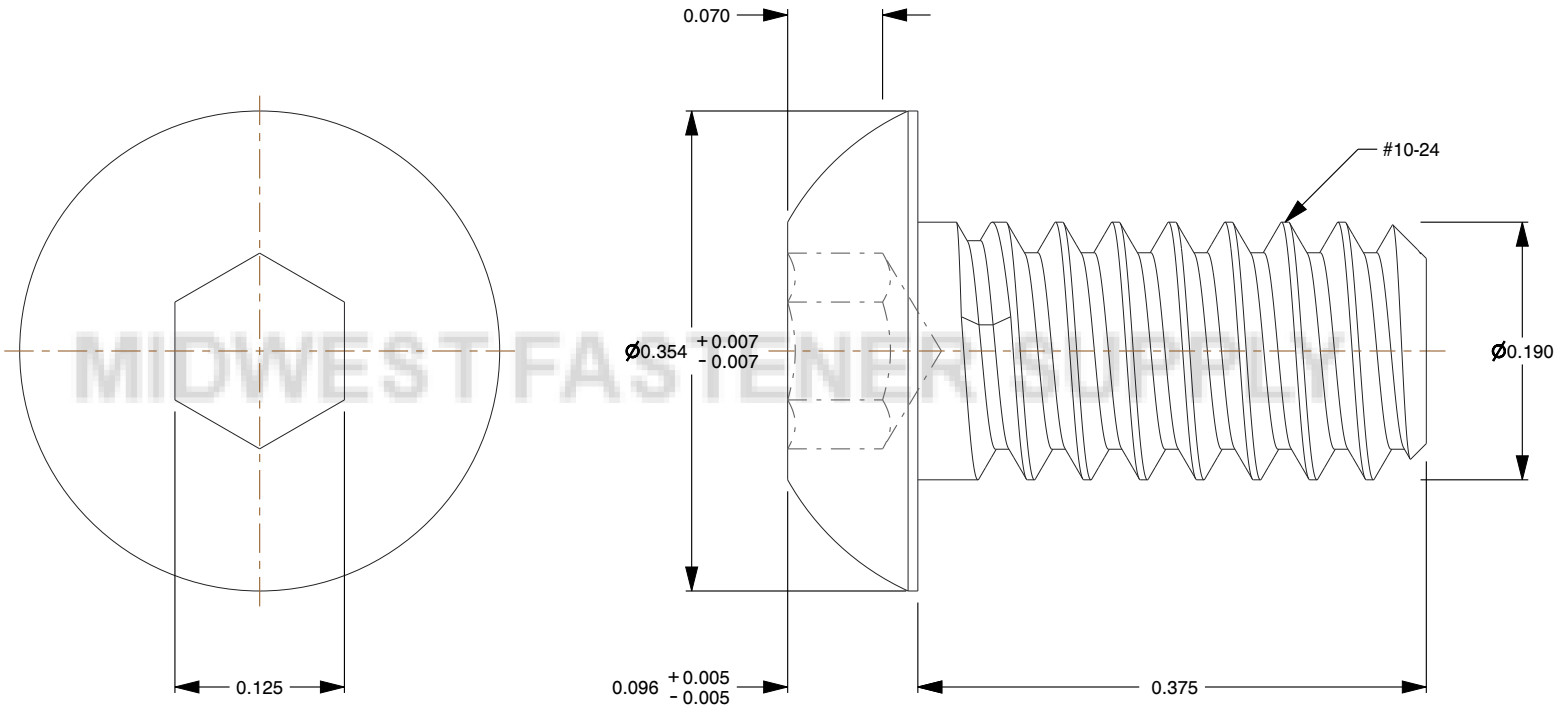

MIDWEST FASTENER SUPPLY

Notes:

1. **Category:** Socket Head Cap Screws
2. **System of Measurement:** Inch
3. **Head Style:** Button Head
4. **Drive Style:** Hex Socket Drive
5. **Thread Length:** Full Thread
6. **Thread Direction:** Right-Hand Thread
7. **Material:** Stainless Steel
8. **Material Grade:** 18-8 Stainless Steel
9. **Coating:** Plain

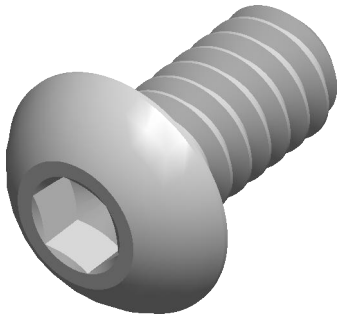

MIDWEST FASTENER SUPPLY midwestfastener.com	THIRD ANGLE PROJECTION 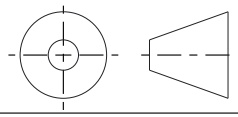
This file and the related information are provided for reference only and may change without notice. Midwest Fastener Supply Inc does not guarantee the accuracy, completeness, or suitability of this file or the information provided. You are responsible for how you use this file and its information.	This document is the property of Midwest Fastener Supply Inc. The information in it may not be copied, shared, or given to any third party without written permission from Midwest Fastener Supply Inc.
DESCRIPTION #10-24 x 3/8" Button Head Socket, 18-8 Stainless Steel	TITLE Cap Screws

Sheet Size	PART NUMBER	Rev.	ISSUED
A	MFH102438SS	01	2026-10-20

SCALE: 7.062	Unless otherwise specified Dimensions are in INCHES