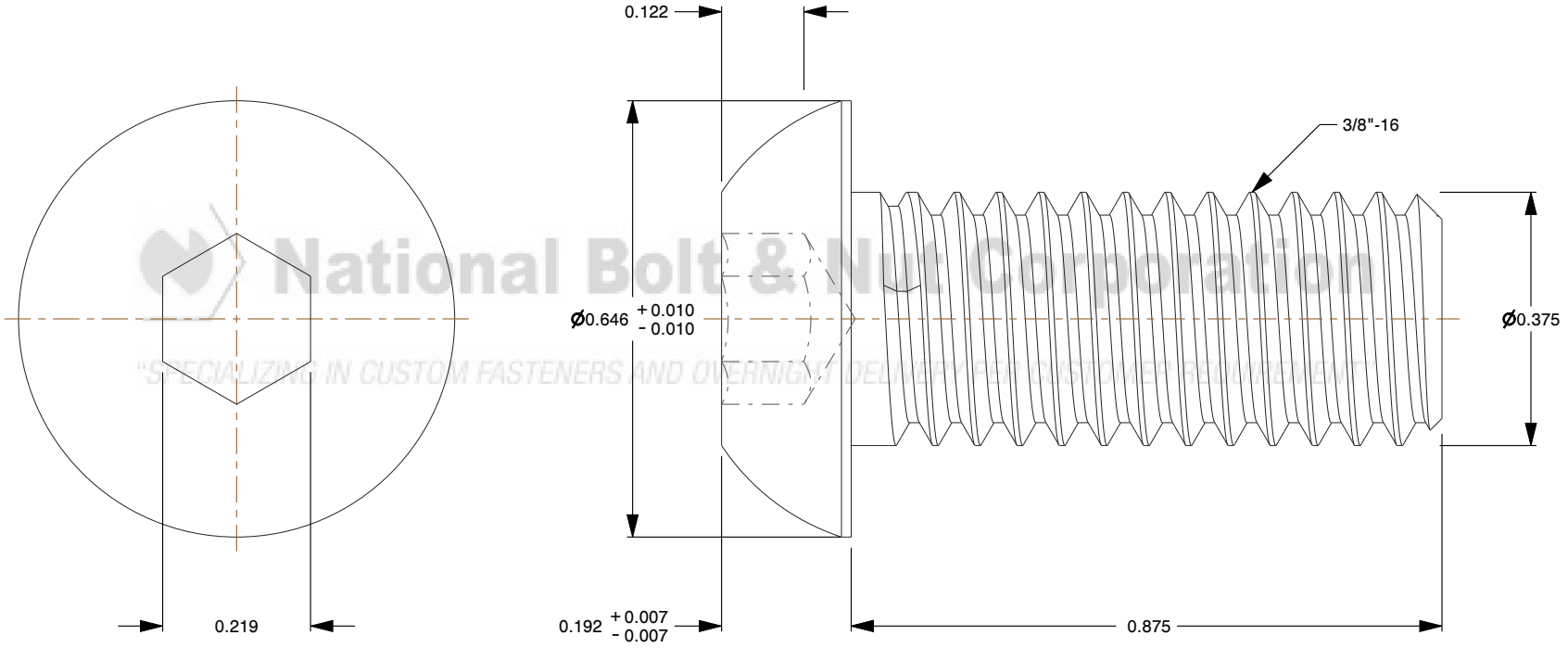

National Bolt & Nut Corporation
"SPECIALIZING IN CUSTOM FASTENERS AND OVERNIGHT DELIVERY PER CUSTOMER REQUIREMENT"

Notes:

1. **Category:** Socket Head Cap Screws
2. **System of Measurement:** Inch
3. **Head Style:** Button Head
4. **Drive Style:** Hex Socket Drive
5. **Thread Length:** Full Thread
6. **Thread Direction:** Right-Hand Thread
7. **Material:** Alloy Steel
8. **Coating:** Uncoated

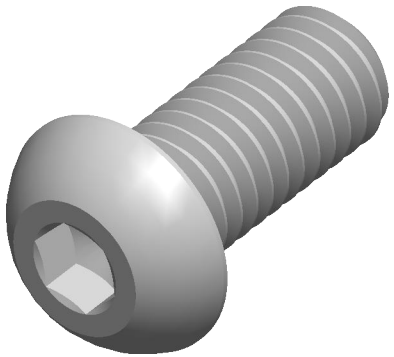

National Bolt & Nut Corporation

"SPECIALIZING IN CUSTOM FASTENERS AND OVERNIGHT DELIVERY PER CUSTOMER REQUIREMENT"

nationalbolt.com

THIRD ANGLE PROJECTION

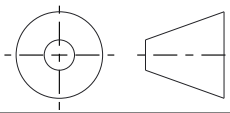

This file and the related information are provided for reference only and may change without notice. National Bolt & Nut Corp does not guarantee the accuracy, completeness, or suitability of this file or the information provided. You are responsible for how you use this file and its information.

This document is the property of National Bolt & Nut Corp. The information in it may not be copied, shared, or given to any third party without written permission from National Bolt & Nut Corp.

DESCRIPTION

Button Head Hex Socket Cap Screw - 3/8-16 x 7/8 - Plain

TITLE

Cap Screws

Sheet Size	PART NUMBER	Rev.	ISSUED
A	PN-11349	01	2026-10-20

SCALE: 3.795

Unless otherwise specified Dimensions are in INCHES