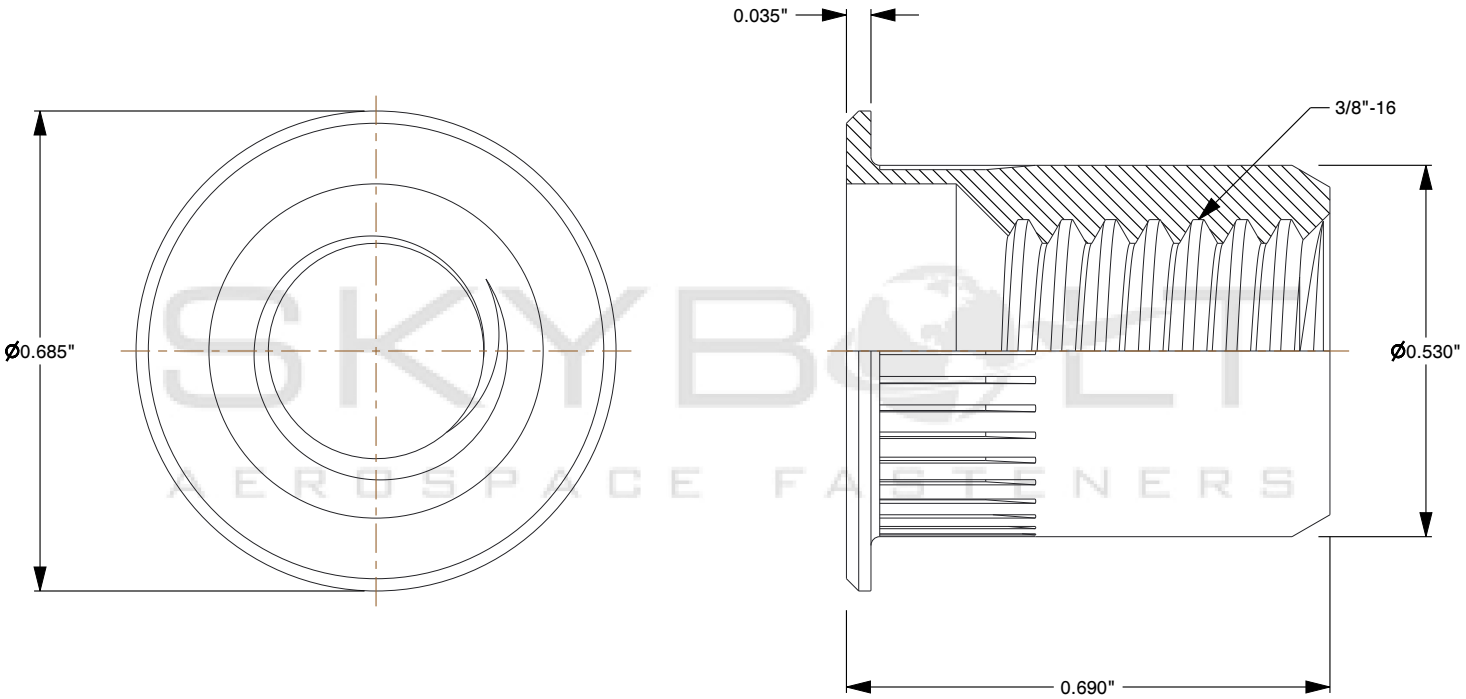

SKYBOLT
AEROSPACE FASTENERS

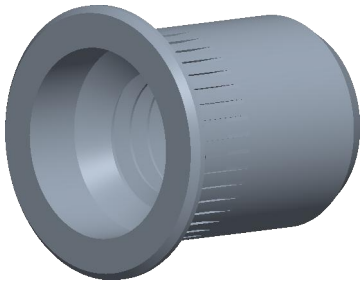

Notes:

1. **Thread Size:** 3/8-16
2. **Material:** Aluminum
3. Excellent for any Blind or Non-Blind Mounting Application
4. Ideal Industrial Applications
5. Use thread locking compound to secure insert
6. Use SK210-30S or SK230-16S Inserts - U.S. Patent 10,087,964

SKYBOLT
AEROSPACE FASTENERS
www.skybolt.com

THIRD ANGLE PROJECTION

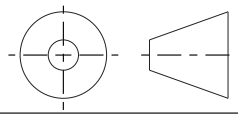

This file and the related information are provided for reference only and may change without notice. Skybolt Aerospace Fasteners does not guarantee the accuracy, completeness, or suitability of this file or the information provided. You are responsible for how you use this file and its information.

This document is the property of Skybolt Aerospace Fasteners. The information in it may not be copied, shared, or given to any third party without written permission from Skybolt Aerospace Fasteners.

DESCRIPTION

Alum -.027-.150 Grip Flange Dia .685

TITLE

Nutsert

Sheet Size	PART NUMBER	Rev.	ISSUED
A	SK2000-150A	01	2026-10-20

SCALE: 3.650

Unless otherwise specified Dimensions are in INCHES