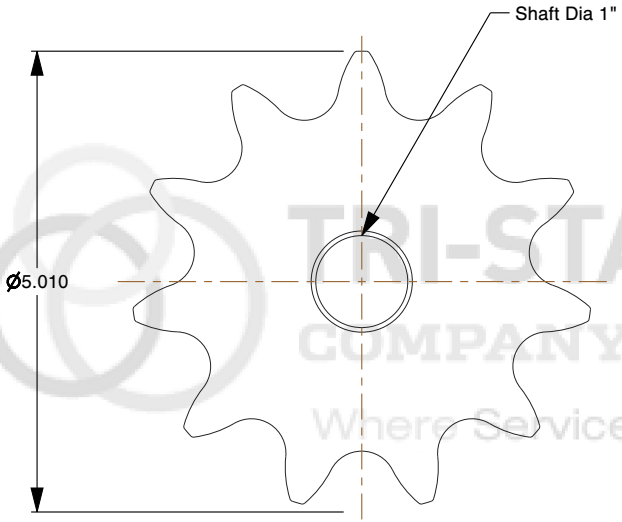

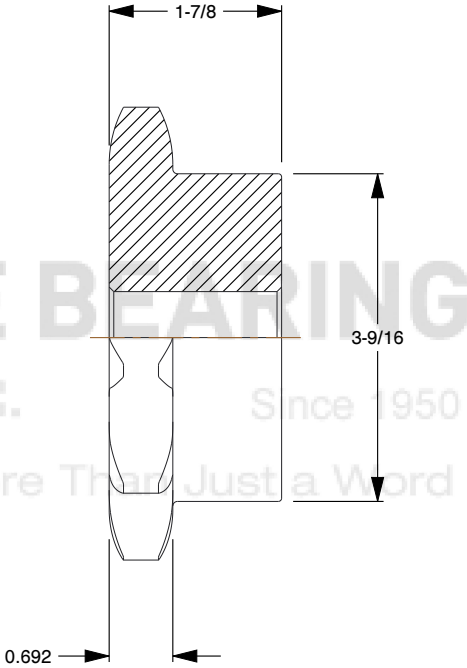

TRI-STATE BEARING COMPANY, INC. Since 1950
Where Service is More Than Just a Word

1. **Bore Diameter:** 1 in
2. **Chain Size :** 100
3. **Finish:** Black Oxide
4. **Hub Diameter:** 3-9/16 in
5. **Length Through Bore:** 1-7/8 in
6. **Material:** C1045 Steel
7. **Number of Teeth:** 11
8. **Outside Diameter:** 5.01 in
9. **Pitch Diameter:** 4.437 in
10. **Pitch:** 1-1/4 in
11. **Type:** Plain Bore Type B

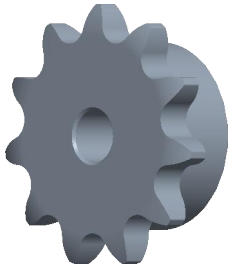

TRI-STATE BEARING COMPANY, INC. Since 1950
Where Service is More Than Just a Word
www.tristate-bearing.com/

THIRD ANGLE PROJECTION

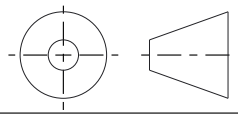

This file and the related information are provided for reference only and may change without notice. Tri-State Bearing Company Inc does not guarantee the accuracy, completeness, or suitability of this file or the information provided. You are responsible for how you use this file and its information.

This document is the property of Tri-State Bearing Company Inc. The information in it may not be copied, shared, or given to any third party without written permission from Tri-State Bearing Company Inc.

DESCRIPTION

IDC Select® IDC H100B11 Plain Bore Type B Single Strand Roller Chain Sprocket, 1 in Dia Bore, 5.01 in OD, 100 Chain, 11 Teeth, 1-1/4 in Pitch, C1045 Steel

TITLE

Single Pitch Roller Chain Sprockets

Sheet Size	PART NUMBER	Rev.	ISSUED
A	IDCH100B11	01	2026-10-26

SCALE: 0.479

Unless otherwise specified Dimensions are in Inch