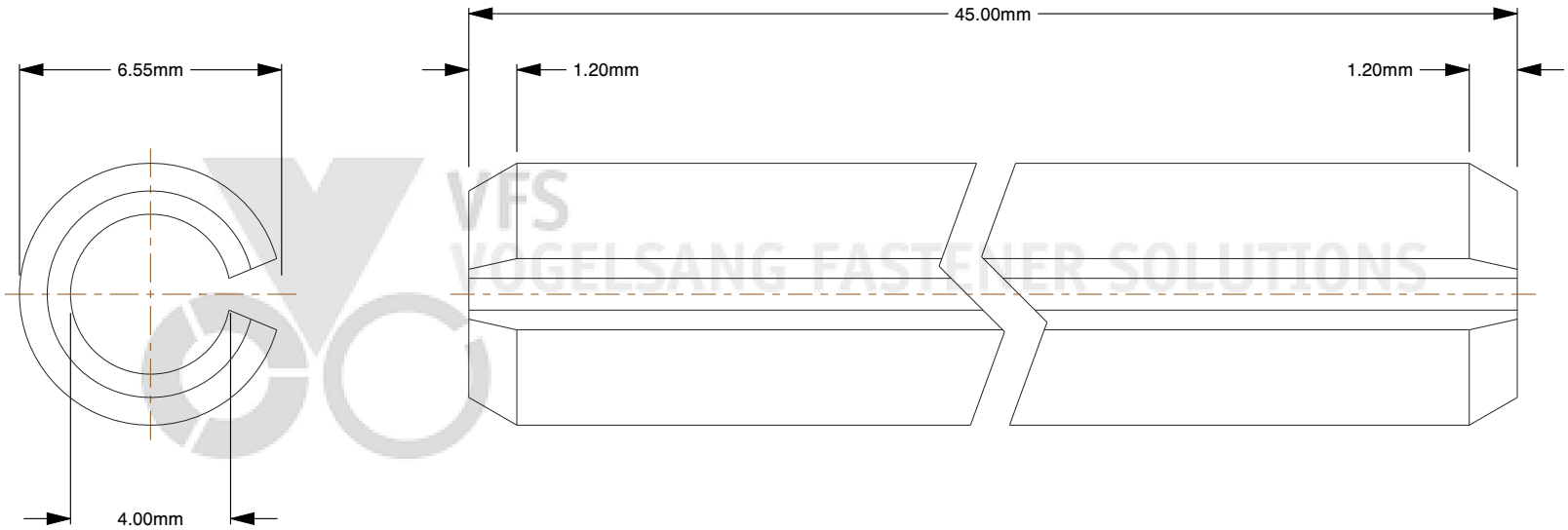

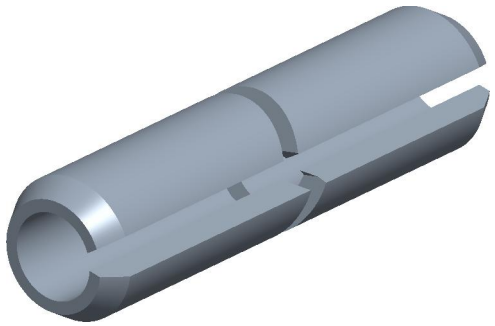

Notes:

1. **Diameter:** M6
2. **Length:** 45mm
3. **Material:** C67S
4. **Standard:** ISO8752

VFS VOGELSANG FASTENER SOLUTIONS

www.vogelsangfastener.com

THIRD ANGLE PROJECTION

This file and the related information are provided for reference only and may change without notice. Vogelsang Fastener Solutions does not guarantee the accuracy, completeness, or suitability of this file or the information provided. You are responsible for how you use this file and its information.

This document is the property of Vogelsang Fastener Solutions. The information in it may not be copied, shared, or given to any third party without written permission from Vogelsang Fastener Solutions.

DESCRIPTION

Slotted Heavy Duty Tension Pins Carbon
ISO 8752 (formerly Din 1481)

TITLE

Slotted Tension Pins

Sheet Size	PART NUMBER	Rev.	ISSUED
A	P30-060-045	01	2026-10-20

SCALE: 5.429

Unless otherwise specified Dimensions are in MILLIMETERS