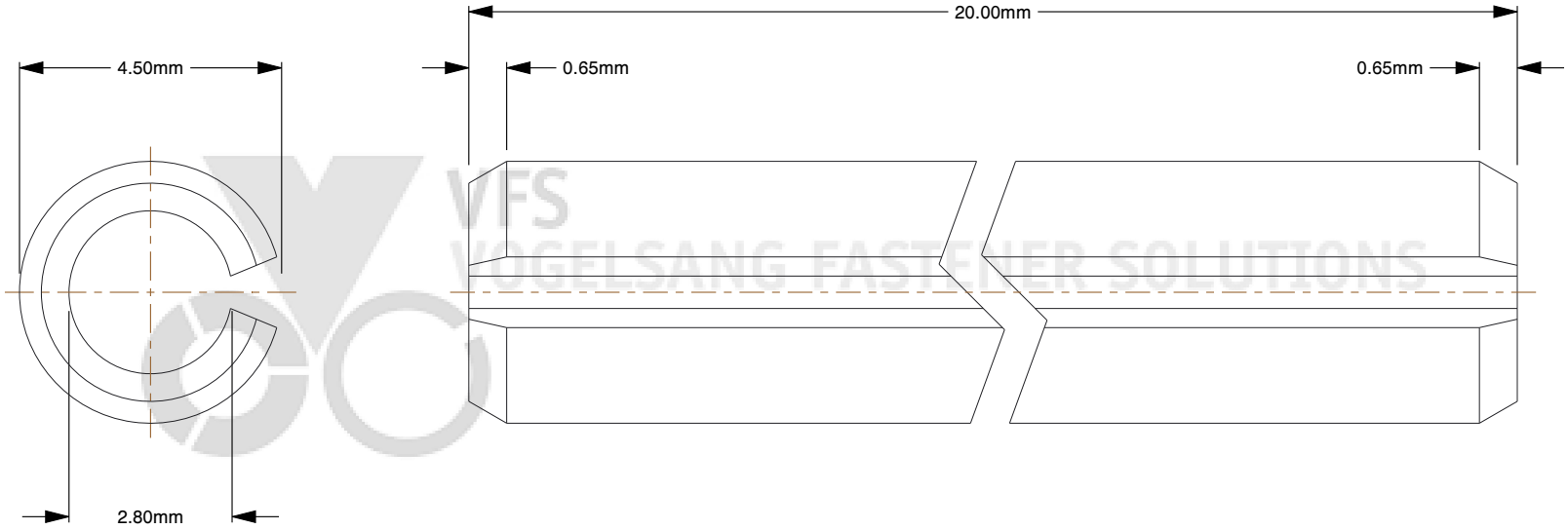

VFS
VOGELSANG FASTENER SOLUTIONS

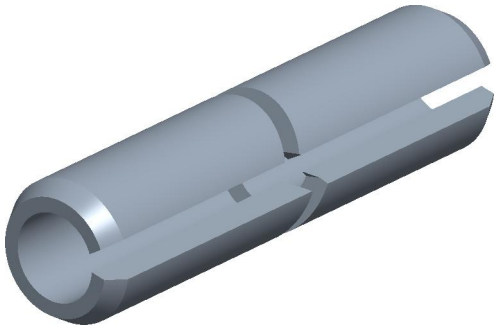

VFS
VOGELSANG FASTENER SOLUTIONS
www.vogelsangfastener.com

THIRD ANGLE PROJECTION

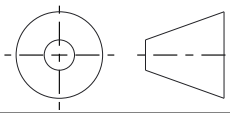

This file and the related information are provided for reference only and may change without notice. Vogelsang Fastener Solutions does not guarantee the accuracy, completeness, or suitability of this file or the information provided. You are responsible for how you use this file and its information.

This document is the property of Vogelsang Fastener Solutions. The information in it may not be copied, shared, or given to any third party without written permission from Vogelsang Fastener Solutions.

DESCRIPTION

Slotted Heavy Duty Tension Pins Carbon
ISO 8752 (formerly Din 1481)

TITLE

Slotted Tension Pins

Sheet Size	PART NUMBER	Rev.	ISSUED
A	P30-040-020	01	2026-10-20

SCALE: 7.902 | Unless otherwise specified Dimensions are in MILLIMETERS

Notes:

1. **Diameter:** M4
2. **Length:** 20mm
3. **Material:** C67S
4. **Standard:** ISO8752