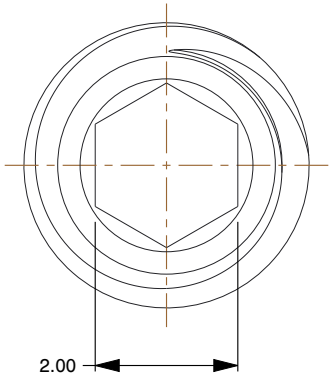

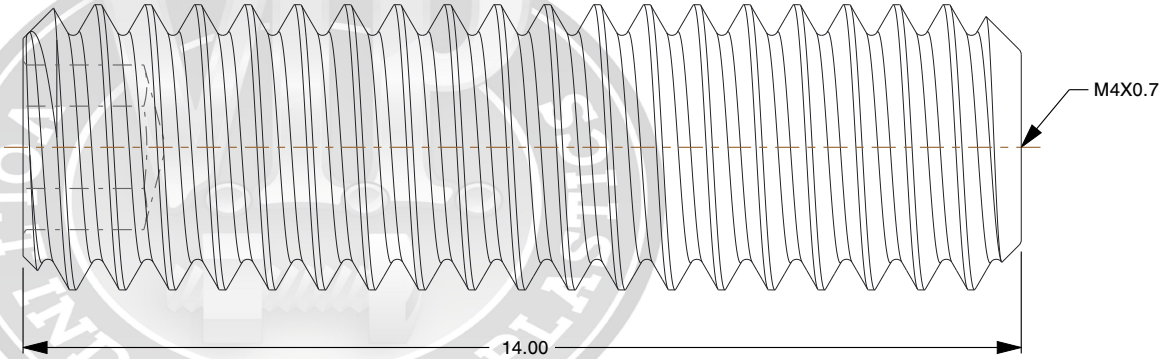

Notes:

1. **Thread Diameter + Pitch:** M4X0.7
2. **Overall Length:** 14mm
3. **Material:** Plastic or Metal
4. **Finish:** Plain
5. **Drive:** 2mm Allen Hex Socket
6. **Drive Depth:** 1.5 - 2.5mm
7. **Type Studs/Rods:** Set Screw
8. **Thread Direction:** Right Hand
9. **Measurement System:** Metric

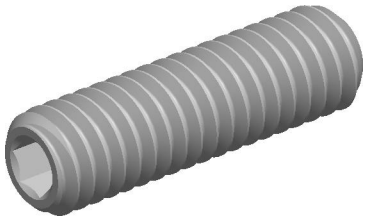

voltplastics.com

THIRD ANGLE PROJECTION

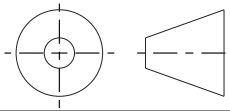

This file and the related information are provided for reference only and may change without notice. Volt Industrial Plastics Inc does not guarantee the accuracy, completeness, or suitability of this file or the information provided. You are responsible for how you use this file and its information.

This document is the property of Volt Industrial Plastics Inc. The information in it may not be copied, shared, or given to any third party without written permission from Volt Industrial Plastics Inc.

DESCRIPTION

M4X0.7 Set Screw
Stainless Steel A2
DIN 913 Flat Point

TITLE

Set Screws

Sheet Size	PART NUMBER	Rev.	ISSUED
A	SC-M04-007-14-SS	01	2026-10-20

SCALE: 9.432

Unless otherwise specified Dimensions are in MILLIMETERS