

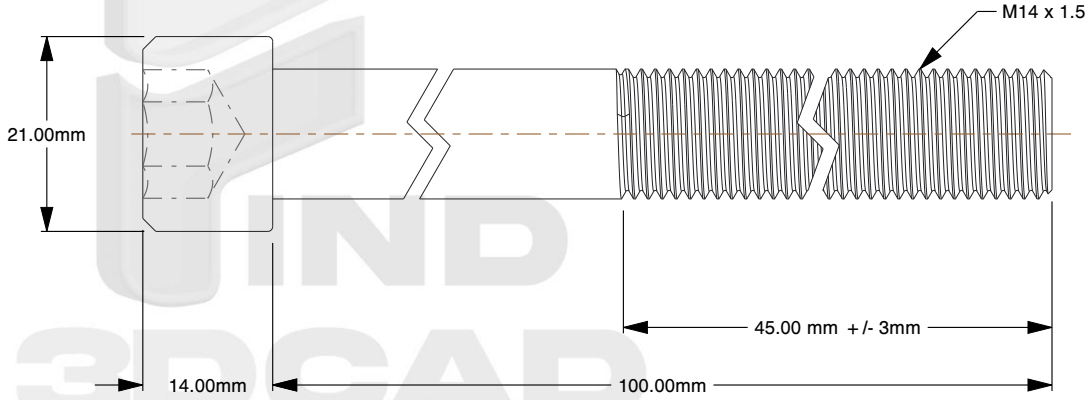

Notes:

1. **Specification:** ISO 12474
2. **Thread Diameter + Pitch:** M14X1.5
3. **Length:** 100mm
4. **Thread Amount:** Partial Thread
5. **Threaded Length:** 45mm +/- 3mm
6. **Unthreaded Length:** 55mm +/- 3mm
7. **Material:** Class 12.9 Steel
8. **Finish:** Black Oxide
9. **Head Diameter:** 21mm
10. **Head Height:** 14mm
11. **Drive:** 12mm Allen Socket
12. **Type Screw/Bolt:** Socket Head
13. **Thread Direction:** Right Hand
14. **Measurement System:** Metric



find3dcad

THIRD ANGLE PROJECTION

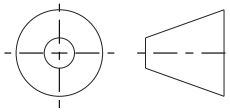

This file and the related information are provided for reference only and may change without notice. find3dcad does not guarantee the accuracy, completeness, or suitability of this file or the information provided. You are responsible for how you use this file and its information.

This document is the property of find3dcad. The information in it may not be copied, shared, or given to any third party without written permission from find3dcad.

TITLE	DESCRIPTION
Socket Head Screws	M14X1.5 Fine Socket Head Steel Class 12.9 Black DIN 912 / ISO 12474

Sheet Size	PART NUMBER	Rev.	ISSUED
A	MIFSHS14X1-5X100	01	2026-10-13

SCALE: 1.227	Unless otherwise specified Dimensions are in MILLIMETERS